# SECTION EM
# ENGINE MECHANICAL

## CONTENTS

**PRECAUTIONS .......................................................... 3**
Precautions for Drain Engine Coolant and Engine Oil ............................................................ 3
Precautions for Disconnecting Fuel Piping ............. 3
Precautions for Removal and Disassembly ............ 3
Precautions for Inspection, Repair and Replacement ............................................................ 3
Precautions for Assembly and Installation .............. 3
Precautions for Angle Tightening ............................ 3
Precautions for Liquid Gasket ................................ 4
REMOVAL OF LIQUID GASKET ......................... 4
LIQUID GASKET APPLICATION PROCEDURE.... 4
**PREPARATION .......................................................... 5**
Special Service Tools .............................................. 5
Commercial Service Tools ....................................... 6
**NOISE, VIBRATION AND HARSHNESS (NVH) TROUBLESHOOTING ............................................... 9**
NVH Troubleshooting — Engine Noise ................... 9
Use the Chart Below to Help You Find the Cause of the Symptom. .................................................... 10
**DRIVE BELTS ............................................................11**
Checking Drive Belt .................................................11
Tension Adjustment .................................................11
Removal and Installation ..........................................11
REMOVAL ............................................................11
INSTALLATION .................................................. 12
Removal and Installation of Drive Belt Auto-Tensioner ..................................................................... 12
REMOVAL .......................................................... 12
INSTALLATION .................................................. 13
**AIR CLEANER AND AIR DUCT .............................. 14**
Removal and Installation ....................................... 14
REMOVAL .......................................................... 14
INSPECTION AFTER REMOVAL ...................... 15
INSTALLATION .................................................. 15
Changing Air Cleaner Filter ................................... 15
REMOVAL .......................................................... 15
INSTALLATION .................................................. 15
**INTAKE MANIFOLD ................................................ 16**
Removal and Installation ....................................... 16
REMOVAL .......................................................... 16
INSPECTION AFTER REMOVAL ...................... 18
INSTALLATION .................................................. 18
INSPECTION AFTER INSTALLATION ............... 19
**EXHAUST MANIFOLD AND THREE WAY CATALYST ........................................................................ 20**
Removal and Installation ....................................... 20
REMOVAL .......................................................... 20
INSPECTION AFTER REMOVAL ...................... 21
INSTALLATION .................................................. 21
**OIL PAN AND OIL STRAINER ................................ 22**
Removal and Installation ....................................... 22
REMOVAL .......................................................... 22
INSPECTION AFTER REMOVAL ...................... 24
INSTALLATION .................................................. 24
INSPECTION AFTER INSTALLATION ............... 26
**IGNITION COIL ....................................................... 27**
Removal and Installation ....................................... 27
REMOVAL .......................................................... 27
INSTALLATION .................................................. 27
**SPARK PLUG (PLATINUM-TIPPED TYPE) ............ 28**
Removal and Installation ....................................... 28
REMOVAL .......................................................... 28
INSPECTION AFTER REMOVAL ...................... 28
INSTALLATION .................................................. 29
**FUEL INJECTOR AND FUEL TUBE ....................... 30**
Removal and Installation ....................................... 30
REMOVAL .......................................................... 30
INSTALLATION .................................................. 32
INSPECTION AFTER INSTALLATION ............... 34
**ROCKER COVER .................................................... 35**
Removal and Installation ....................................... 35
REMOVAL .......................................................... 35
INSTALLATION .................................................. 36
**CAMSHAFT ............................................................ 37**
Removal and Installation ....................................... 37
REMOVAL .......................................................... 37
INSPECTION AFTER REMOVAL ...................... 40

INSTALLATION .... 42
INSPECTION AFTER INSTALLATION .... 45
Valve Clearance .... 46
INSPECTION .... 46
ADJUSTMENT .... 47
**TIMING CHAIN .... 49**
Removal and Installation .... 49
REMOVAL .... 49
INSPECTION AFTER REMOVAL .... 53
INSTALLATION .... 54
INSPECTION AFTER INSTALLATION .... 58
**OIL SEAL .... 59**
Removal and Installation of Valve Oil Seal .... 59
REMOVAL .... 59
INSTALLATION .... 59
Removal and Installation of Front Oil Seal .... 60
REMOVAL .... 60
INSTALLATION .... 60
Removal and Installation of Rear Oil Seal .... 61
REMOVAL .... 61
INSTALLATION .... 61
**CYLINDER HEAD .... 62**
On-Vehicle Service .... 62
CHECKING COMPRESSION PRESSURE .... 62
Removal and Installation .... 63
REMOVAL .... 63
INSPECTION AFTER REMOVAL .... 64
INSTALLATION .... 65
INSPECTION AFTER INSTALLATION .... 65
Disassembly and Assembly .... 66
DISASSEMBLY .... 66
ASSEMBLY .... 67
Inspection After Disassembly .... 68
VALVE DIMENSIONS .... 68
VALVE GUIDE CLEARANCE .... 69
VALVE GUIDE REPLACEMENT .... 69
VALVE SEAT CONTACT .... 71
VALVE SEAT REPLACEMENT .... 71
VALVE SPRING SQUARENESS .... 72
VALVE SPRING DIMENSIONS AND VALVE SPRING PRESSURE LOAD .... 72
**ENGINE ASSEMBLY .... 73**
Removal and Installation (2WD Models) .... 73
REMOVAL .... 74
INSTALLATION .... 75
INSPECTION AFTER INSTALLATION .... 76
Removal and Installation (AWD Models) .... 77
REMOVAL .... 77
INSTALLATION .... 80
INSPECTION AFTER INSTALLATION .... 80
**CYLINDER BLOCK .... 81**
Disassembly and Assembly .... 81
DISASSEMBLY .... 82
ASSEMBLY .... 85
How to Select Piston and Bearing .... 90
DESCRIPTION .... 90
HOW TO SELECT PISTON .... 91
HOW TO SELECT CONNECTING ROD BEARING .... 92
HOW TO SELECT MAIN BEARING .... 94
Inspection After Disassembly .... 98
CRANKSHAFT END PLAY .... 98
CONNECTING ROD SIDE CLEARANCE .... 98
PISTON TO PISTON PIN OIL CLEARANCE .... 98
PISTON RING SIDE CLEARANCE .... 99
PISTON RING END GAP .... 99
CONNECTING ROD BEND AND TORSION .... 100
CONNECTING ROD BIG END DIAMETER .... 100
CONNECTING ROD BUSHING OIL CLEARANCE .... 100
CYLINDER BLOCK DISTORTION .... 101
MAIN BEARING HOUSING INNER DIAMETER .... 102
PISTON TO CYLINDER BORE CLEARANCE .... 102
CRANKSHAFT MAIN JOURNAL DIAMETER .... 103
CRANKSHAFT PIN JOURNAL DIAMETER .... 104
OUT-OF-ROUND AND TAPER OF CRANKSHAFT .... 104
CRANKSHAFT RUNOUT .... 104
CONNECTING ROD BEARING OIL CLEARANCE .... 104
MAIN BEARING OIL CLEARANCE .... 105
MAIN BEARING CRUSH HEIGHT .... 106
CONNECTING ROD BEARING CRUSH HEIGHT .... 106
LOWER CYLINDER BLOCK MOUNTING BOLT OUTER DIAMETER .... 106
CONNECTING ROD BOLT OUTER DIAMETER .... 106
FLYWHEEL DEFLECTION (M/T MODELS) .... 107
MOVEMENT AMOUNT OF FLYWHEEL (M/T MODELS) .... 107
**SERVICE DATA AND SPECIFICATIONS (SDS) .... 108**
Standard and Limit .... 108
GENERAL SPECIFICATIONS .... 108
DRIVE BELT .... 108
INTAKE MANIFOLD AND EXHAUST MANIFOLD .... 108
SPARK PLUG .... 108
CYLINDER HEAD .... 108
VALVE .... 109
CAMSHAFT AND CAMSHAFT BEARING .... 113
CYLINDER BLOCK .... 113
PISTON, PISTON RING AND PISTON PIN .... 115
CONNECTING ROD .... 116
CRANKSHAFT .... 116
MAIN BEARING .... 118
CONNECTING ROD BEARING .... 119

# PRECAUTIONS

PFP:00001

## Precautions for Drain Engine Coolant and Engine Oil

ABS00CIL

Drain engine coolant and engine oil when the engine is cooled.

## Precautions for Disconnecting Fuel Piping

ABS00CIM

- Before starting work, make sure no fire or spark producing items are in the work area.
- Release fuel pressure before disassembly.
- After disconnecting pipes, plug openings to stop fuel leakage.

## Precautions for Removal and Disassembly

ABS00CIN

- When instructed to use special service tools, use the specified tools. Always be careful to work safely, avoid forceful or uninstructed operations.
- Exercise maximum care to avoid damage to mating or sliding surfaces.
- Cover openings of engine system with a tape or the equivalent, if necessary, to seal out foreign materials.
- Mark and arrange disassembly parts in an organized way for easy troubleshooting and re-assembly.
- When loosening nuts and bolts, as a basic rule, start with the one furthest outside, then the one diagonally opposite, and so on. If the order of loosening is specified, do exactly as specified. Power tools may be used where noted in the step.

## Precautions for Inspection, Repair and Replacement

ABS00CIO

Before repairing or replacing, thoroughly inspect parts. Inspect new replacement parts in the same way, and replace if necessary.

## Precautions for Assembly and Installation

ABS00CIP

- Use torque wrench to tighten bolts or nuts to specification.
- When tightening nuts and bolts, as a basic rule, equally tighten in several different steps starting with the ones in center, then ones on inside and outside diagonally in this order. If the order of tightening is specified, do exactly as specified.
- Replace with new gasket, packing, oil seal or O-ring.
- Thoroughly wash, clean, and air-blow each part. Carefully check engine oil or engine coolant passages for any restriction and blockage.
- Avoid damaging sliding or mating surfaces. Completely remove foreign materials such as cloth lint or dust. Before assembly, oil sliding surfaces well.
- Release air within route when refilling after draining engine coolant.
- Before starting the engine, apply fuel pressure to fuel lines with turning ignition switch “ON” (with the engine stopped). Then make sure there are no leaks at fuel line connections.
- After repairing, start the engine and increase engine speed to check engine coolant, fuel, engine oil, and exhaust gases for leakage.

## Precautions for Angle Tightening

ABS00CIQ

- Use the angle wrench [SST: KV10112100 (BT8653-A)] for the final tightening of the following engine parts.
  - Cylinder head bolts
  - Lower cylinder block bolts
  - Connecting rod cap bolts
  - Crankshaft pulley bolt (No angle wrench is required as the bolt flange is provided with notches for angle tightening)
  - Balancer unit
- Do not use a torque value for final tightening.
- The torque value for these parts are for a preliminary step.
- Ensure thread and seat surfaces are clean and coated with engine oil.

## Precautions for Liquid Gasket

ABS00CIR

### REMOVAL OF LIQUID GASKET

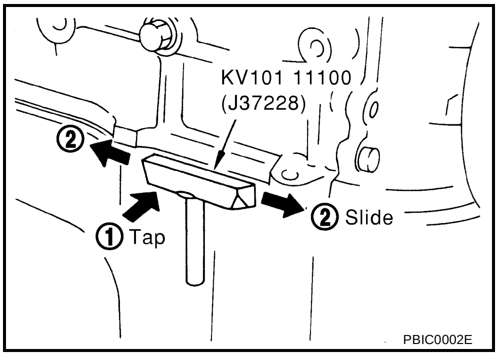

PBIC0002E

- After removing the mounting nuts and bolts, separate the mating surface using a seal cutter [SST] and remove the old liquid gasket sealing.

  **CAUTION:**

  **Be careful not to damage the mating surfaces.**
- Tap seal cutter to insert it, and then slide it by tapping on the side as shown in the figure.
- In areas where the seal cutter [SST] is difficult to use, use plastic hammer to lightly tap the parts, to remove it.

  **CAUTION:**

  **If for some unavoidable reason a tool such as screwdriver is used, be careful not to damage the mating surfaces.**

### LIQUID GASKET APPLICATION PROCEDURE

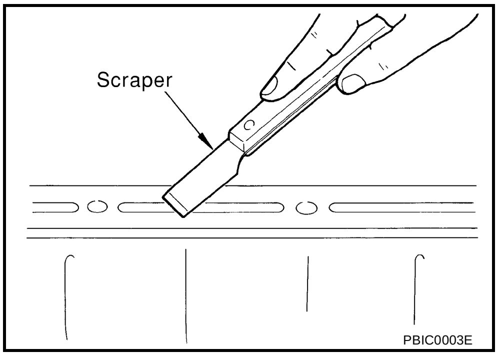

PBIC0003E

1. Using a scraper, remove the old liquid gasket adhering to the liquid gasket application surface and the mating surface.
   - Remove the liquid gasket completely from the groove of the liquid gasket application surface, mounting bolts and bolt holes.
2. Wipe the liquid gasket application surface and the mating surface with white gasoline (lighting and heating use) to remove adhering moisture, grease and foreign materials.

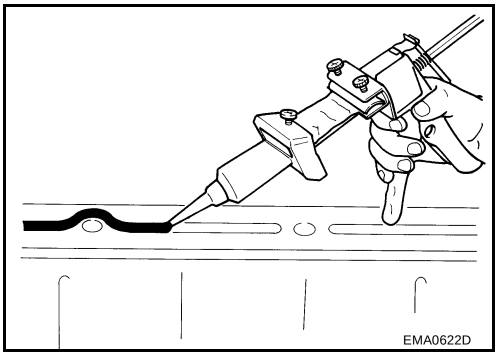
EMA0622D

3. Attach liquid gasket tube to the tube presser [SST: WS39930000 ( — )].

   **Use Genuine RTV Silicone Sealant or equivalent. Refer to** **GI-48, "RECOMMENDED CHEMICAL PRODUCTS AND SEALANTS"** **.**
4. Apply the liquid gasket without breaks to the specified location with the specified dimensions.
   - If there is a groove for the liquid gasket application, apply the liquid gasket to the groove.

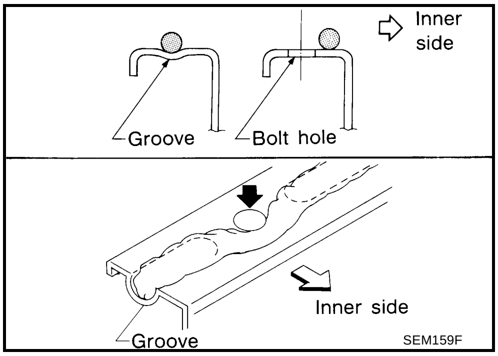

SEM159F

   - As for the bolt holes, normally apply the liquid gasket inside the holes. Occasionally, it should be applied outside the holes. Make sure to read the text of service manual.
   - Within 5 minutes of liquid gasket application, install the mating component.
   - If the liquid gasket protrudes, wipe it off immediately.
   - Do not retighten mounting nuts or bolts after the installation.
   - Wait 30 minutes or more after installation before refilling engine oil and engine coolant.

**CAUTION:**

**If there are instructions in this manual, observe them.**

# PREPARATION

PFP:00002

## Special Service Tools

*ABS00CIS*

The actual shapes of Kent-Moore tools may differ from those of special service tools illustrated here.

| Tool number<br>(Kent-Moore No.)<br>Tool name | Description |
|---|---|
| KV10111100<br>(J37228)<br>Seal cutter<br>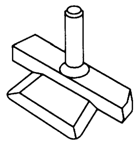<br>S-NT046 | Removing oil pan and front cover, etc. |
| KV10116200<br>(J26336-A)<br>Valve spring compressor<br>1. KV10115900<br>(J26336-20)<br>Attachment<br>2. KV10109220<br>( — )<br>Adapter<br>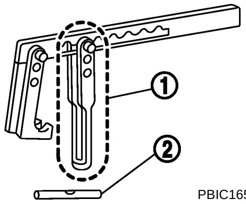<br><br>PBIC1650E | Disassembling valve mechanism<br>Part (1) is a component of KV10116200 (J26336-A), but Part (2) is not so. |
| KV10112100<br>(BT8653-A)<br>Angle wrench<br>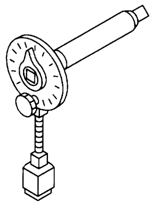<br>NT014 | Tightening bolts for connecting rod bearing cap, cylinder head, etc. in angle |
| KV10117100<br>(J-3647-A)<br>Heated oxygen sensor wrench<br>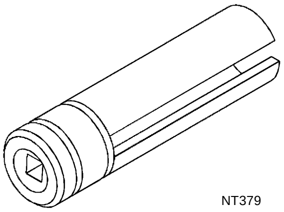<br>NT379 | Loosening or tightening heated oxygen sensors<br>**For 22 mm (0.87 in) width hexagon nut** |
| KV10107902<br>(J38959)<br>Valve oil seal puller<br>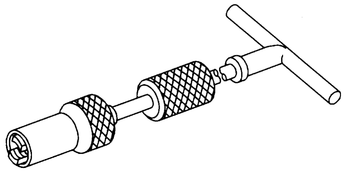<br>NT011 | Replacing valve oil seal |
| KV10115600<br>(J-38958)<br>Valve oil seal drift<br>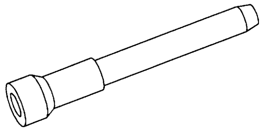<br>NT024 | Installing valve oil seal |

A
EM
C
D
E
F
G
H
I
J
K
L
M

| Tool number<br>(Kent-Moore No.)<br>Tool name | Description |
|---|---|
| EM03470000<br>(J-8037)<br>Piston ring compressor<br>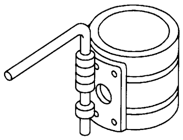<br>NT044 | Installing piston assembly into cylinder bore |
| ST16610001<br>(J-23907)<br>Pilot bushing puller<br>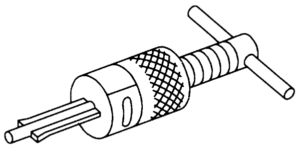<br>NT045 | Removing pilot converter (A/T models) |
| WS39930000<br>( — )<br>Tube presser<br>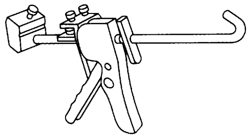<br>NT052 | Pressing the tube of liquid gasket |
| —<br>(J-45488)<br>Quick connector release<br>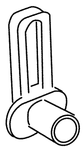<br>PBIC0198E | Removing fuel tube quick connectors in engine room<br>(Available in SEC. 164 of PARTS CATALOG: Part No. 16441 6N210) |

## Commercial Service Tools

ABS00CIT

| (Kent-Moore No.)<br>Tool name | Description |
|---|---|
| Power tool<br>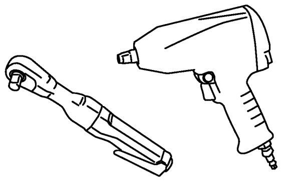<br>PBIC0190E | Loosening nuts and bolts |
| ( — )<br>Spark plug wrench<br>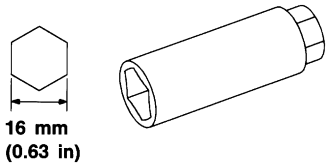<br>S-NT047 | Removing and installing spark plug |

| (Kent-Moore No.)<br>Tool name | Description |
|---|---|
| ( — )<br>Pulley holder<br>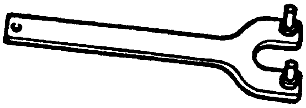<br>ZZA1010D | Removing and installing crankshaft pulley |
| ( — )<br>Pulley puller<br>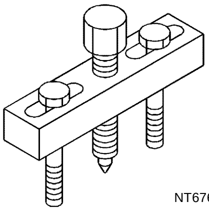<br>NT676 | Removing crankshaft pulley |
| ( — )<br>1. Compression tester<br>2. Adapter<br>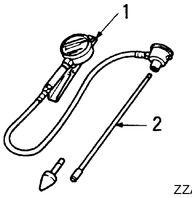<br>ZZA0008D | Checking compression pressure |
| (J24239-01)<br>Cylinder head bolt wrench<br>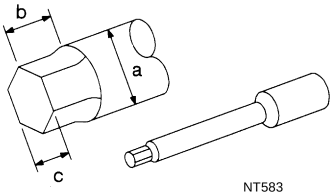<br>NT583 | Loosening and tightening cylinder head bolt, and used with the angle wrench [SST: KV10112100 (BT8653-A)]<br>**a: 13 (0.51) dia.**<br>**b: 12 (0.47)**<br>**c: 10 (0.39)**<br>Unit: mm (in) |
| ( — )<br>Valve seat cutter set<br>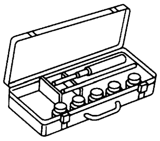<br>S-NT048 | Finishing valve seat dimensions |
| TORX socket<br>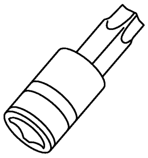<br>PBIC1113E | Removing and installing flywheel<br>**Size: T55** |
| ( — )<br>Piston ring expander<br>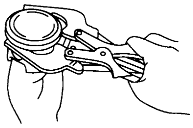<br>S-NT030 | Removing and installing piston ring |

| (Kent-Moore No.)<br>Tool name | | Description |
|---|---|---|
| ( — )<br>Valve guide drift | 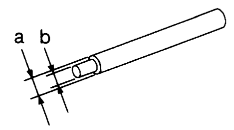<br>S-NT015 | Removing and installing valve guide<br>**Intake and Exhaust:**<br>**a: 9.5 mm (0.374 in) dia.**<br>**b: 5.5 mm (0.217 in) dia.** |
| ( — )<br>Valve guide reamer | 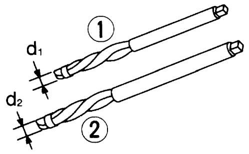<br>S-NT016 | 1: Reaming valve guide inner hole<br>2: Reaming hole for oversize valve guide<br>**Intake and Exhaust:**<br>**d1 : 6.0 mm (0.236 in) dia.**<br>**d2 : 10.2 mm (0.402 in) dia.** |
| a: (J-43897-18)<br>b: (J-43897-12)<br>Oxygen sensor thread cleaner | 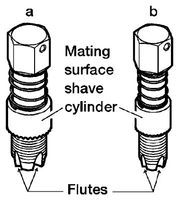<br>AEM488 | Reconditioning the exhaust system threads before installing a new heated oxygen sensor (Use with anti-seize lubricant shown below.)<br>**a = 18 mm (0.71 in) dia. for zirconia heated oxygen sensor**<br>**b = 12 mm (0.47 in) dia. for titania heated oxygen sensor** |
| ( — )<br>Anti-seize lubricant i.e.: (Permatex™ 133AR or equivalent meeting MIL specification MIL-A-907) | 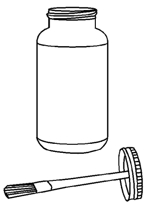<br>AEM489 | Lubricating oxygen sensor thread cleaning tool when reconditioning exhaust system threads |
| ( — )<br>Manual lift table caddy | 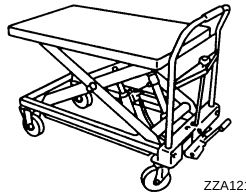<br>ZZA1210D | Removing and installing the engine |

# NOISE, VIBRATION AND HARSHNESS (NVH) TROUBLESHOOTING

PFP:00003

## NVH Troubleshooting — Engine Noise

ABS00CIU

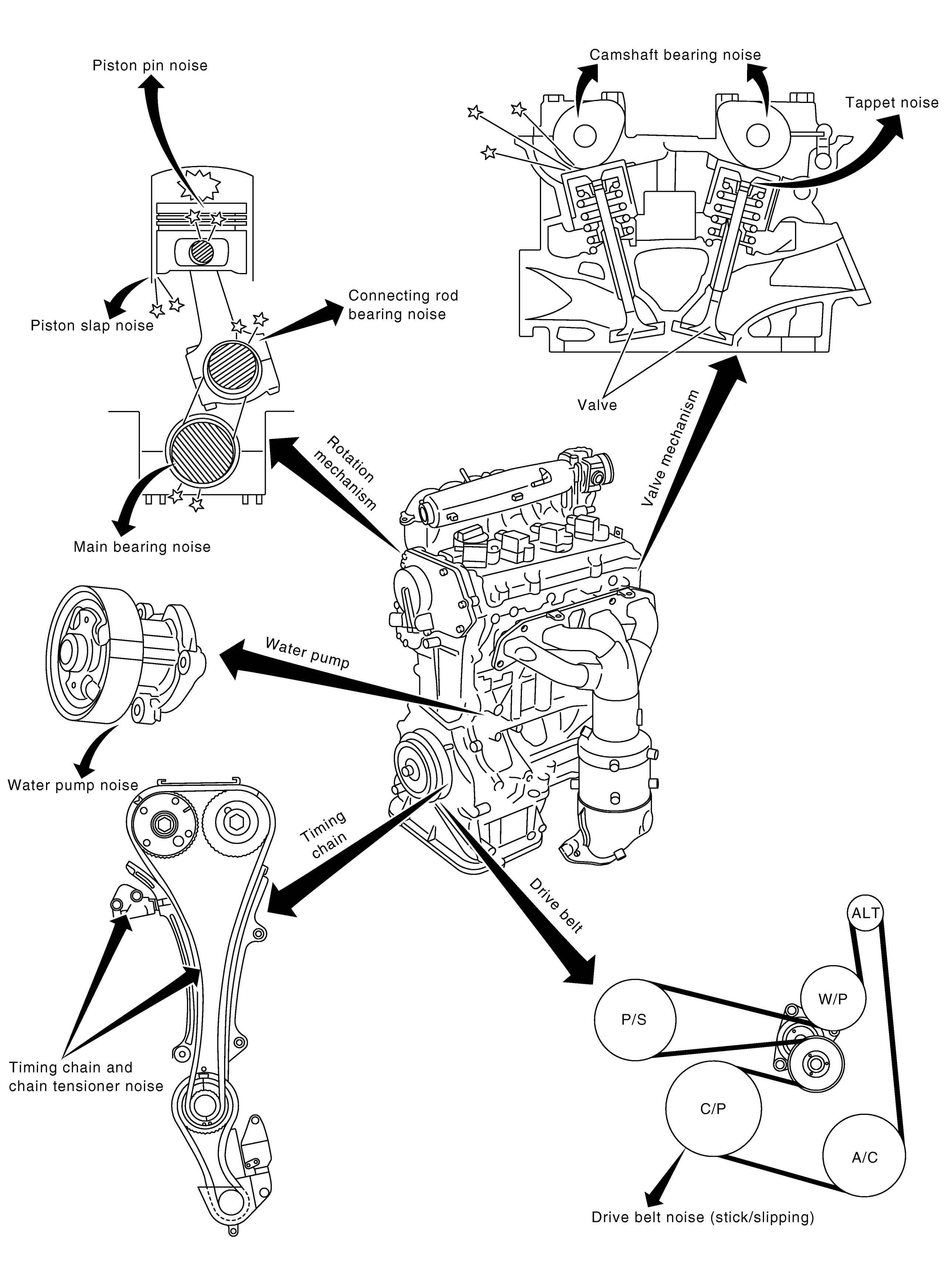


PBIC2768E

## Use the Chart Below to Help You Find the Cause of the Symptom.

ABS00CIV

1. Locate the area where noise occurs.
2. Confirm the type of noise.
3. Specify the operating condition of engine.
4. Check specified noise source.

If necessary, repair or replace these parts.

| Location of noise | Type of noise | Operating condition of engine | | | | | | Source of noise | Check item | Reference page |
|---|---|---|---|---|---|---|---|---|---|---|
| | | Before warm-up | After warm-up | When starting | When idling | When racing | While driving | | | |
| Top of engine Rocker cover Cylinder head | Ticking or clicking | C | A | — | A | B | — | Tappet noise | Valve clearance | EM-46 |
| | Rattle | C | A | — | A | B | C | Camshaft bearing noise | Camshaft journal oil clearance<br>Camshaft runout | EM-40<br>EM-40 |
| Crankshaft pulley Cylinder block (Side of engine) Oil pan | Slap or knock | — | A | — | B | B | — | Piston pin noise | Piston to piston pin oil clearance<br>Connecting rod bushing oil clearance | EM-98<br>EM-100 |
| | Slap or rap | A | — | — | B | B | A | Piston slap noise | Piston to cylinder bore clearance<br>Piston ring side clearance<br>Piston ring end gap<br>Connecting rod bend and torsion | EM-102<br>EM-99<br>EM-99<br>EM-100 |
| | Knock | A | B | C | B | B | B | Connecting rod bearing noise | Connecting rod bushing oil clearance<br>Connecting rod bearing oil clearance | EM-100<br>EM-104 |
| | Knock | A | B | — | A | B | C | Main bearing noise | Main bearing oil clearance<br>Crankshaft runout | EM-105<br>EM-104 |
| Front of engine Front cover | Tapping or ticking | A | A | — | B | B | B | Timing chain and chain tensioner noise | Timing chain cracks and wear<br>Timing chain tensioner operation | EM-53<br>EM-49 |
| Front of engine | Squeaking or fizzing | A | B | — | B | — | C | Drive belt (Sticking or slipping) | Drive belt deflection | EM-11 |
| | Creaking | A | B | A | B | A | B | Drive belt (Slipping) | Idler pulley bearing operation | |
| | Squall Creak | A | B | — | B | A | B | Water pump noise | Water pump operation | CO-20, "WATER PUMP" |

A: Closely related B: Related C: Sometimes related —: Not related

# DRIVE BELTS

PFP:02117

## Checking Drive Belt

ABS00CIW

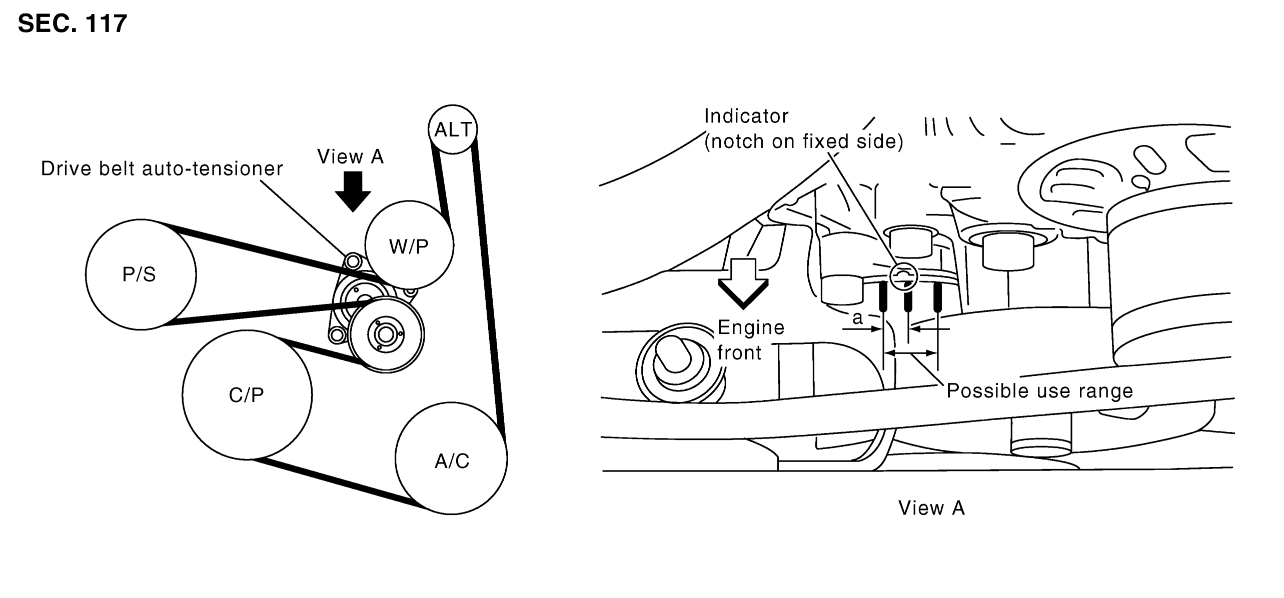

PBIC2622E

**WARNING:**

**Be sure to perform this step when the engine is stopped.**

- Make sure that the indicator (notch on fixed side) of drive belt auto-tensioner is within the possible use range (between three line notches on moving side).

  **NOTE:**
  - Check the drive belt auto-tensioner indication when the engine is cold.
  - When new drive belt is installed, the indicator (notch on fixed side) should be within the range "a" in the figure.
- Visually check entire drive belt for wear, damage or cracks.
- If the indicator (notch on fixed side) is out of the possible use range or belt is damaged, replace drive belt.

## Tension Adjustment

ABS00CIX

Belt tensioning is not necessary, as it is automatically adjusted by drive belt auto-tensioner.

## Removal and Installation

ABS00CIY

### REMOVAL

1. Remove splash guard on RH undercover.
2. Hold the hexagonal part in center of drive belt auto-tensioner pulley with a box wrench securely. Then move the wrench handle in the direction of arrow (loosening direction of tensioner).

   **CAUTION:**
   - **Avoid placing hand in a location where pinching may occur if the holding tool accidentally comes off.**
   - **Do not loosen the hexagonal part in center of drive belt auto-tensioner pulley (Do not turn it counterclockwise). If turned counterclockwise, the complete drive belt auto-tensioner must be replaced as a unit, including the pulley.**

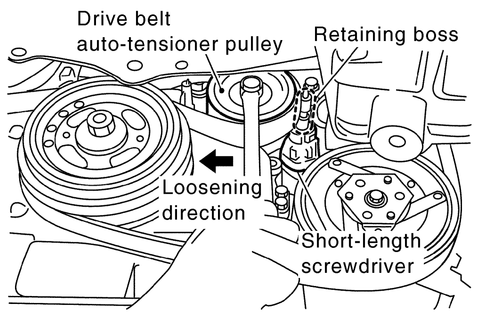

PBIC2169E

3. Insert a rod approximately 6 mm (0.24 in) in diameter such as short-length screwdriver into the hole of the retaining boss to fix drive belt auto-tensioner pulley.
4. Loosen drive belt from water pump pulley in sequence, and remove it.

## INSTALLATION

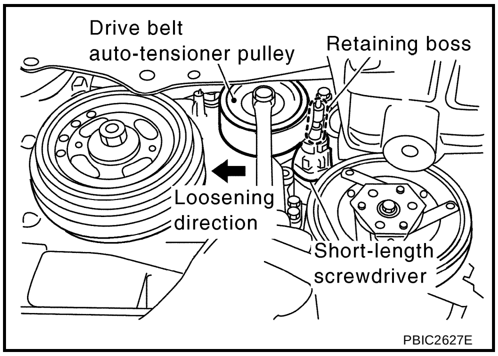


1. Hold the hexagonal part in center of drive belt auto-tensioner pulley with a box wrench securely. Then move the wrench handle in the direction of arrow (loosening direction of tensioner).

   **CAUTION:**
   - **Avoid placing hand in a location where pinching may occur if the holding tool accidentally comes off.**
   - **Do not loosen the hexagonal part in center of drive belt auto-tensioner pulley (Do not turn it counterclockwise). If turned counterclockwise, the complete drive belt auto-tensioner must be replaced as a unit, including the pulley.**
2. Insert a rod approximately 6 mm (0.24 in) in diameter such as short-length screwdriver into the hole of retaining boss to fix drive belt auto-tensioner pulley.
3. Hook drive belt onto all pulleys except for water pump, and then onto water pump pulley finally.

   **CAUTION:**
   - **Confirm drive belt is completely set to pulleys.**
   - **Check for engine oil, working fluid and engine coolant are not adhered to drive belt and each pulley groove.**
4. Release drive belt auto-tensioner, and apply tension to drive belt.
5. Turn crankshaft pulley clockwise several times to equalize tension between each pulley.
6. Confirm tension of drive belt at indicator (notch on fixed side) is within the possible use range. Refer to EM-11, "Checking Drive Belt" .

## Removal and Installation of Drive Belt Auto-Tensioner

ABS00CIZ

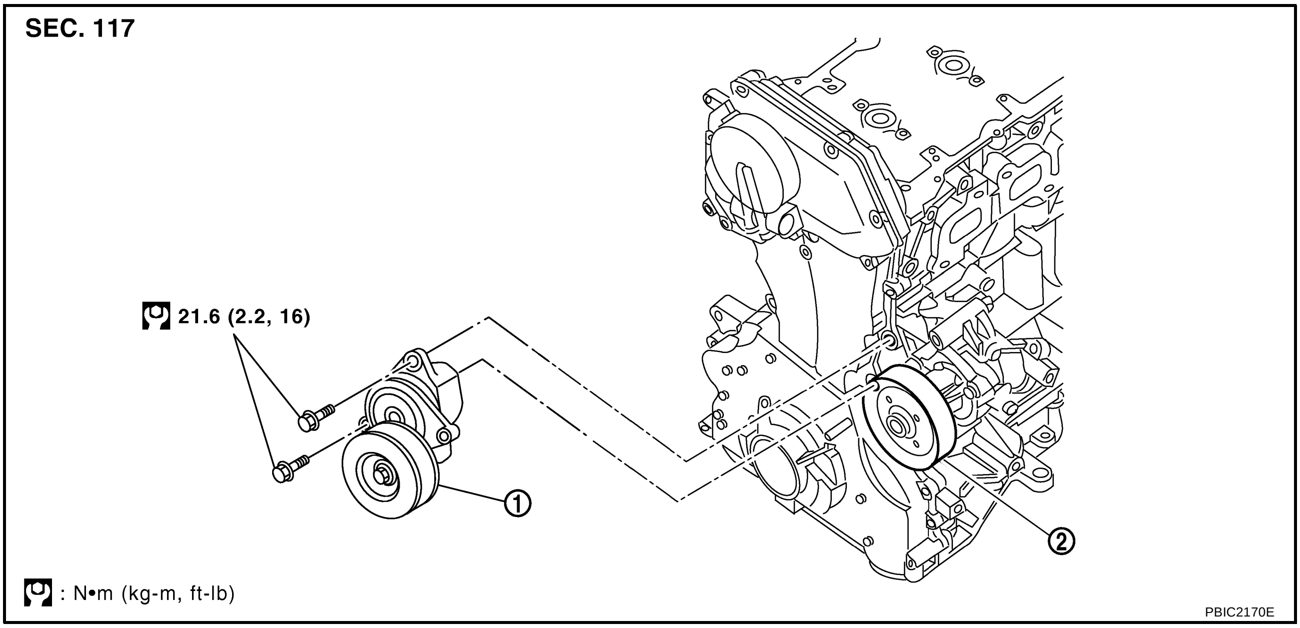


1. Drive belt auto-tensioner
2. Water pump pulley

## REMOVAL

**CAUTION:**

**The complete drive belt auto-tensioner must be replaced as a unit, including the pulley.**

1. Remove splash guard on RH undercover.
2. Remove drive belt. Refer to EM-11, "Removal and Installation" .
3. Release the fixed drive belt auto-tensioner pulley.
4. Remove drive belt auto-tensioner.

**CAUTION:**
**Do not loosen the hexagonal part in center of drive belt auto-tensioner pulley (Do not turn it counter-clockwise). If turned counterclockwise, the complete drive belt auto-tensioner must be replaced as a unit, including the pulley.**

## INSTALLATION

Note the following, and install in the reverse order of removal.

- When installing drive belt auto-tensioner, be careful not to interfere with water pump pulley.

  **CAUTION:**
  - **If there is damage greater than peeled paint, replace drive belt auto-tensioner.**
  - **Do not swap the pulley between new and old drive belt auto-tensioner.**

# AIR CLEANER AND AIR DUCT

PFP:16500

## Removal and Installation

ABS00CJ0

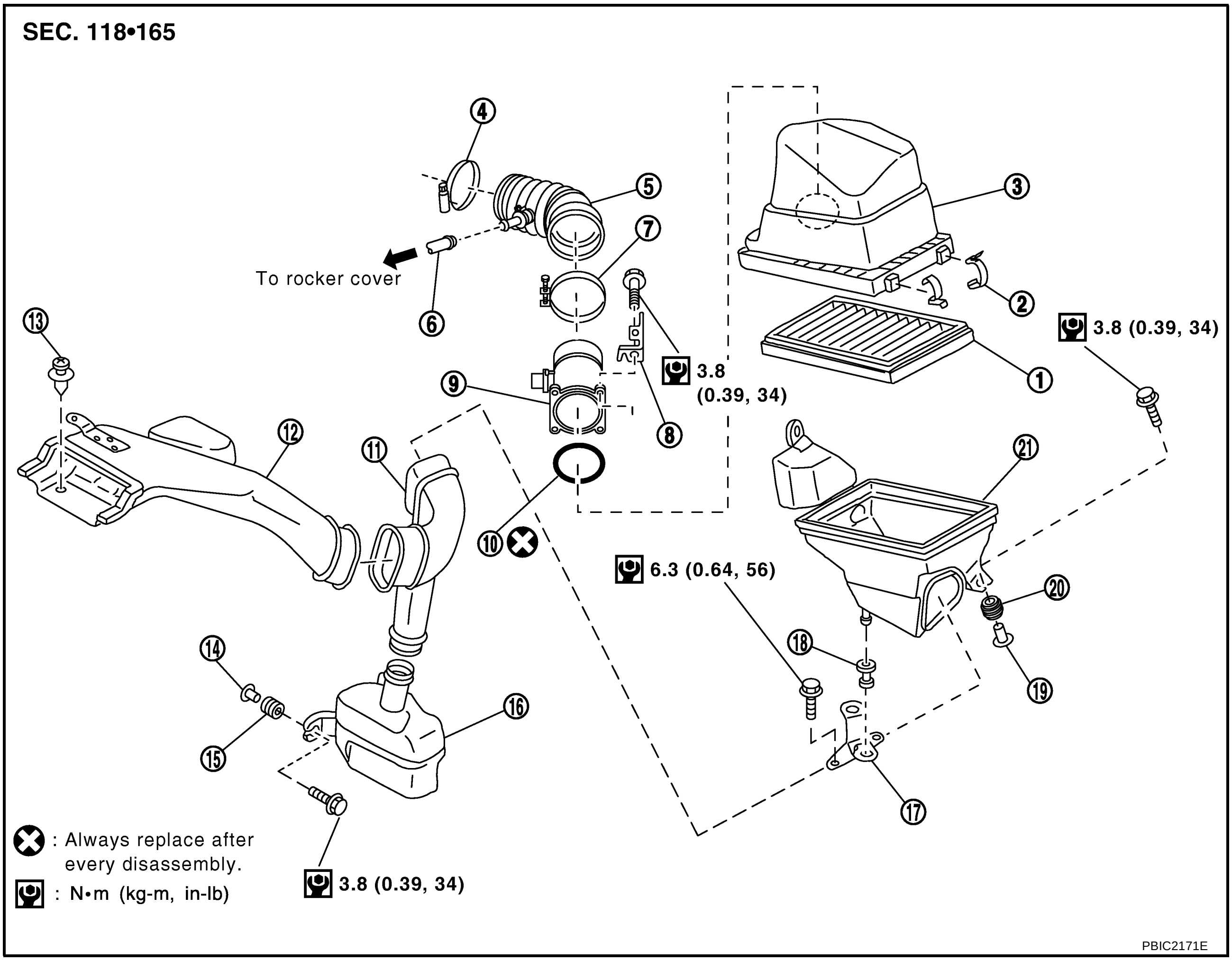


| | | | | | |
|---|---|---|---|---|---|
| 1. | Air cleaner filter | 2. | Clip | 3. | Air cleaner case upper |
| 4. | Clamp | 5. | Air duct | 6. | PCV hose |
| 7. | Clamp | 8. | Bracket | 9. | Mass air flow sensor |
| 10. | O-ring | 11. | Air duct | 12. | Air duct (inlet) |
| 13. | Clip | 14. | Collar | 15. | Grommet |
| 16. | Resonator | 17. | Bracket (A/T models) | 18. | Mounting rubber |
| 19. | Collar | 20. | Grommet | 21. | Air cleaner case lower |

### REMOVAL

1. Remove mass air flow sensor harness clamp.
2. Disconnect harness connector from mass air flow sensor.
3. Disconnect PCV hose.
4. Remove air duct (inlet), air ducts and air cleaner case/mass air flow sensor assembly disconnecting their joints.
   - Add mating marks as necessary for easier installation.
5. Remove mass air flow sensor from air cleaner case upper, as necessary.

   **CAUTION:**
   **Handle mass air flow sensor with the following cares.**
   - **Do not shock it.**
   - **Do not disassemble it.**
   - **Do not touch its sensor.**

6. Remove resonator in fender lifting left fender protector, as necessary.

### INSPECTION AFTER REMOVAL

Inspect air duct assembly for cracks or tear.

- Replace air duct assembly, if necessary.

### INSTALLATION

Note the following, and install in the reverse order of removal.

- Align marks. Attach each joint. Screw clamps firmly.

## Changing Air Cleaner Filter

ABS00CJ1

### REMOVAL

1. Unfasten clips and lift up air cleaner case upper.
2. Remove air cleaner filter.

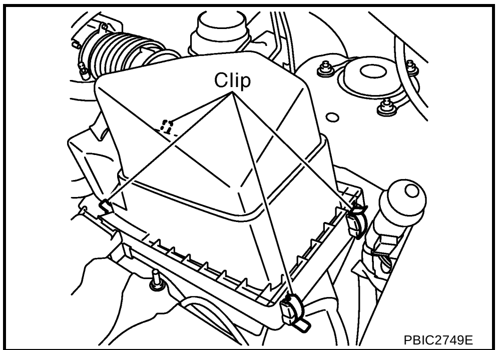


PBIC2749E

### INSTALLATION

Install in the reverse order of removal.

# INTAKE MANIFOLD

PFP:14003

## Removal and Installation

ABS00E9L

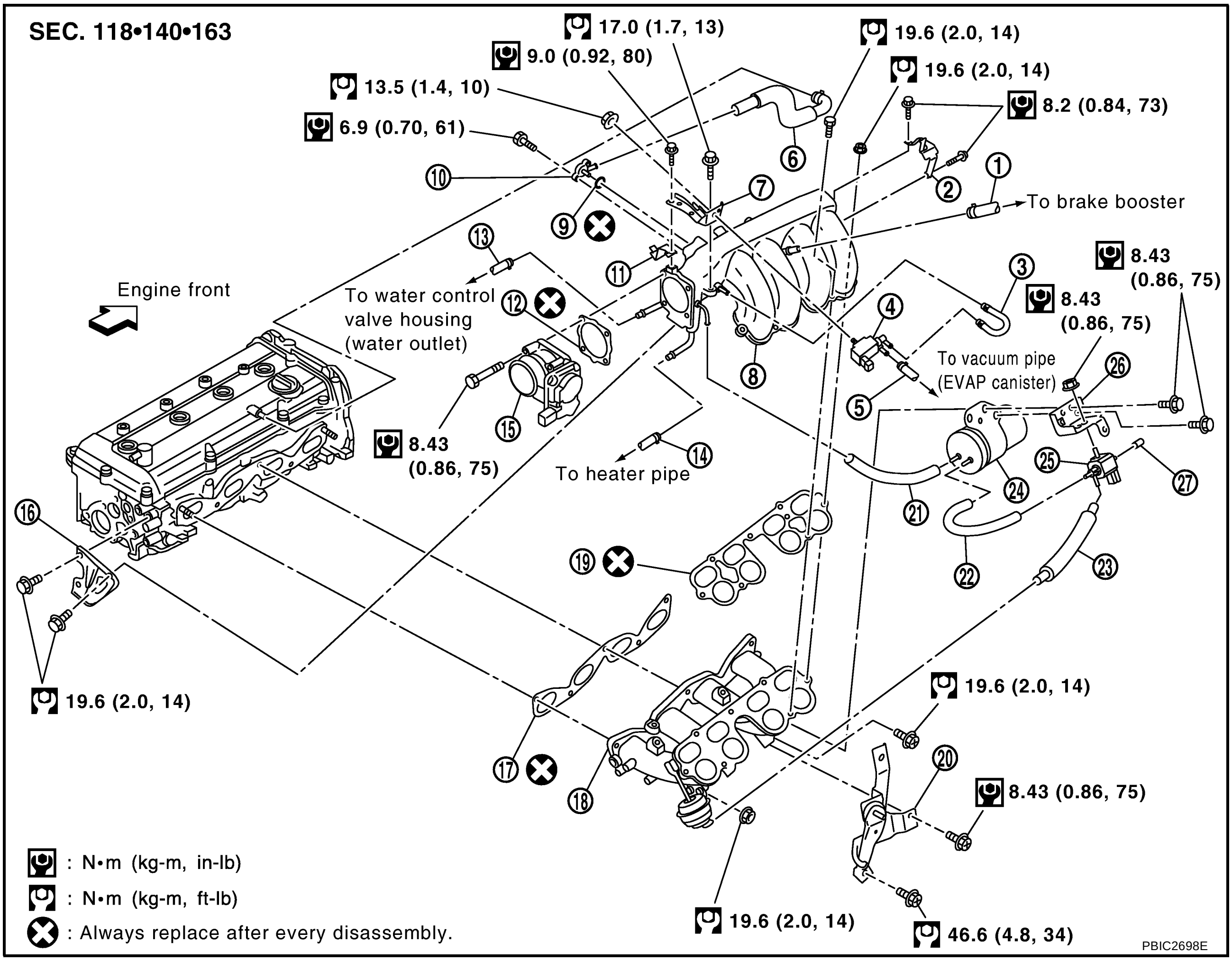


| | | | | | |
|---|---|---|---|---|---|
| 1. | Vacuum hose | 2. | Harness bracket | 3. | Vacuum hose |
| 4. | EVAP canister purge volume control solenoid valve | 5. | Vacuum hose | 6. | PCV hose |
| 7. | Harness bracket | 8. | Intake manifold collector | 9. | O-ring |
| 10. | Hose connector | 11. | Hose bracket | 12. | Gasket |
| 13. | Water hose | 14. | Water hose | 15. | Electric throttle control actuator |
| 16. | Intake manifold rear support | 17. | Gasket | 18. | Intake manifold |
| 19. | Gasket | 20. | Intake manifold support | 21. | Vacuum hose |
| 22. | Vacuum hose | 23. | Vacuum hose | 24. | Vacuum reservoir tank |
| 25. | VIAS control solenoid valve | 26. | Vacuum reservoir tank bracket | 27. | Filter |

**CAUTION:**

**Do not remove or disassemble parts unless instructed as shown in the figure.**

## REMOVAL

1. Release fuel pressure. Refer to EC-90, "FUEL PRESSURE RELEASE" .

2. Remove engine cover.

**CAUTION:**

**Be careful not to damage or scratch engine cover.**

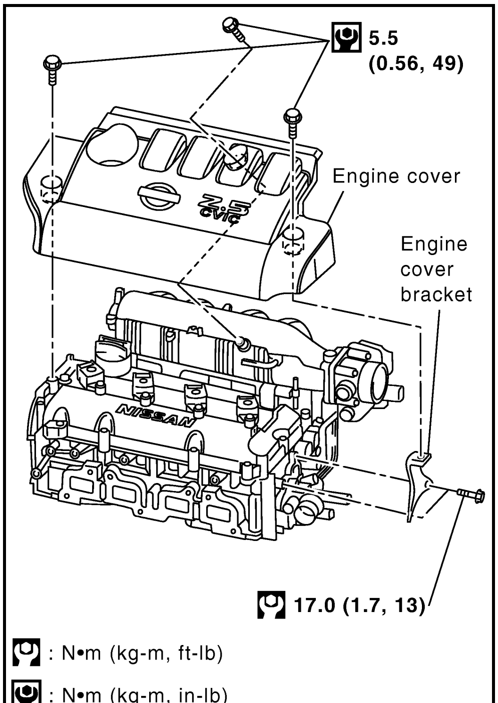

PBIC2602E

3. Remove air cleaner case upper, mass air flow sensor and air duct assembly. Refer to EM-14, "AIR CLEANER AND AIR DUCT" .
4. Remove quick connector caps, and disconnect quick connector at the engine side. Refer to EM-30, "FUEL INJECTOR AND FUEL TUBE" .

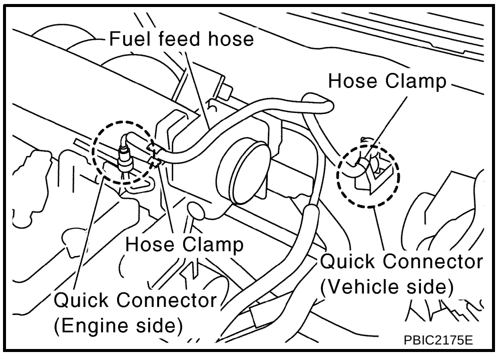

PBIC2175E

5. Remove electric throttle control actuator with the following procedure:

a. Disconnect harness connector.

b. Loosen mounting bolts in reverse order as shown in the figure, and remove electric throttle control actuator and gasket.

**CAUTION:**

- **Handle carefully to avoid any shock to electric throttle control actuator.**
- **Do not disassemble.**

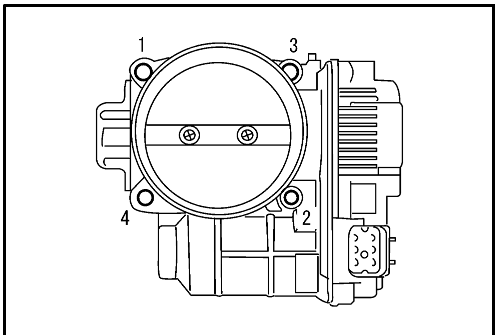

EMJ1612D

6. Disconnect harness, vacuum hoses and PCV hose from intake manifold collector, and move them aside.
7. Remove intake manifold rear support.

8. Loosen mounting nuts and bolts in reverse order as shown in the figure, and remove intake manifold collector and gasket.

   **CAUTION:**

   **Cover engine openings to avoid entry of foreign materials.**

   **NOTE:**

   Disregard No. 8 when loosening.

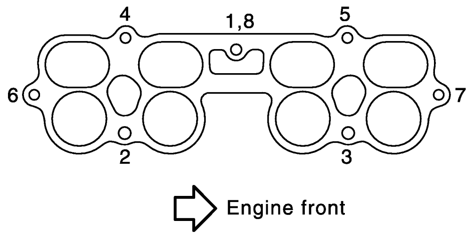

SBIA0230E

9. Disconnect power steering piping from intake manifold, and move them aside. Refer to PS-33, "HYDRAULIC LINE" .
10. Remove intake manifold support.
11. Disconnect sub-harness from fuel injector. Refer to EM-30, "FUEL INJECTOR AND FUEL TUBE" .
12. Remove fuel tube and fuel injector assembly from intake manifold. Refer to EM-30, "FUEL INJECTOR AND FUEL TUBE" .
13. Loosen mounting nuts and bolts in reverse order as shown in the figure, and remove intake manifold and gasket.

    **CAUTION:**

    - **Cover engine openings to avoid entry of foreign materials.**
    - **Do not disassemble intake manifold.**

    **NOTE:**

    Disregard No. 6 when loosening.

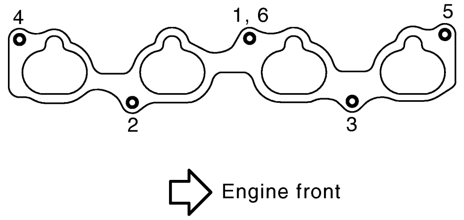

PBIC2699E

14. Remove EVAP canister purge volume control solenoid valve from intake manifold collector, if necessary.
15. Remove vacuum reservoir tank and VIAS control solenoid valve from intake manifold, if necessary.

## INSPECTION AFTER REMOVAL

### Surface Distortion

- Using a straightedge and a feeler gauge, check the surface distortion of both the intake manifold collector mating surface and the intake manifold mating surfaces.

  **Limit : 0.1 mm (0.004 in)**

- If it exceeds the limit, replace intake manifold and/or intake manifold collector.

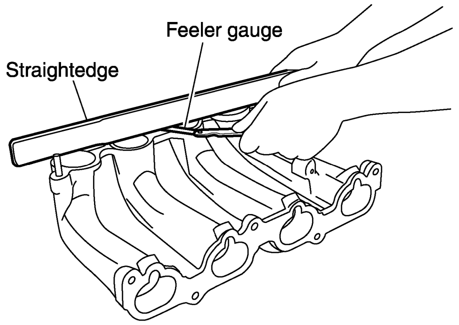

KBIA0235E

## INSTALLATION

Note the following, and install in the reverse order of removal.

### Intake Manifold

- If stud bolts were removed, install them and tighten to the specified torque below.

  **: 10.8 N·m (1.1 kg-m, 8 ft-lb)**

- Tighten in numerical order as shown in the figure.

  **NOTE:**
  No. 6 means double tightening of bolt No. 1.

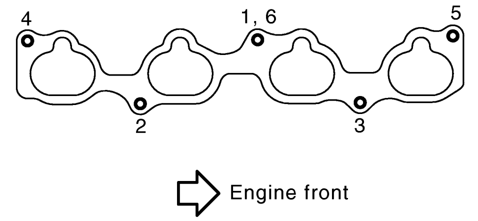

PBIC2699E

## Intake Manifold Collector

- If stud bolts were removed, install them and tighten to the specified torque below.

  **: 10.8 N·m (1.1 kg-m, 8 ft-lb)**

- Tighten in numerical order as shown in the figure.

  **NOTE:**
  No. 8 means double tightening of bolt No. 1.

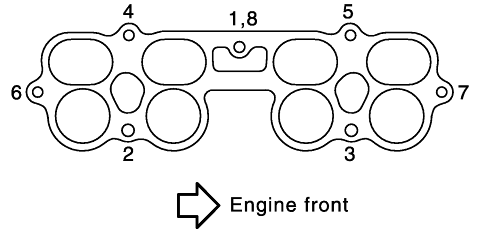

SBIA0230E

## Electric Throttle Control Actuator

- Tighten mounting bolts equally and diagonally in several steps and in numerical order as shown in the figure.
- Perform the “Throttle Valve Closed Position Learning” when harness connector of electric throttle control actuator is disconnected. Refer to EC-88, "Throttle Valve Closed Position Learning" .
- Perform the “Idle Air Volume Learning” and “Throttle Valve Closed Position Learning” when electric throttle control actuator is replaced. Refer to EC-88, "Idle Air Volume Learning" .

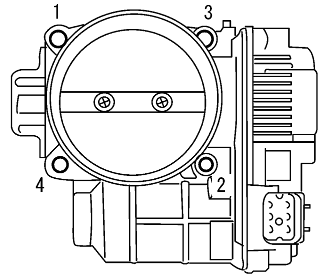

EMJ1612D

## INSPECTION AFTER INSTALLATION

Make sure there are no fuel leaks at connections before installing engine cover with the following procedure:

1. Apply fuel pressure to fuel lines with turning ignition switch “ON” (with the engine stopped). Then make sure there are no fuel leaks at connections.

   **NOTE:**
   Use mirrors for checking on invisible points.

2. Start the engine. With engine speed increased, make sure again there are no fuel leaks at connections.

   **CAUTION:**
   **Do not touch the engine immediately after stopped as the engine becomes extremely hot.**

# EXHAUST MANIFOLD AND THREE WAY CATALYST

PFP:14004

## Removal and Installation

ABS00CJ4

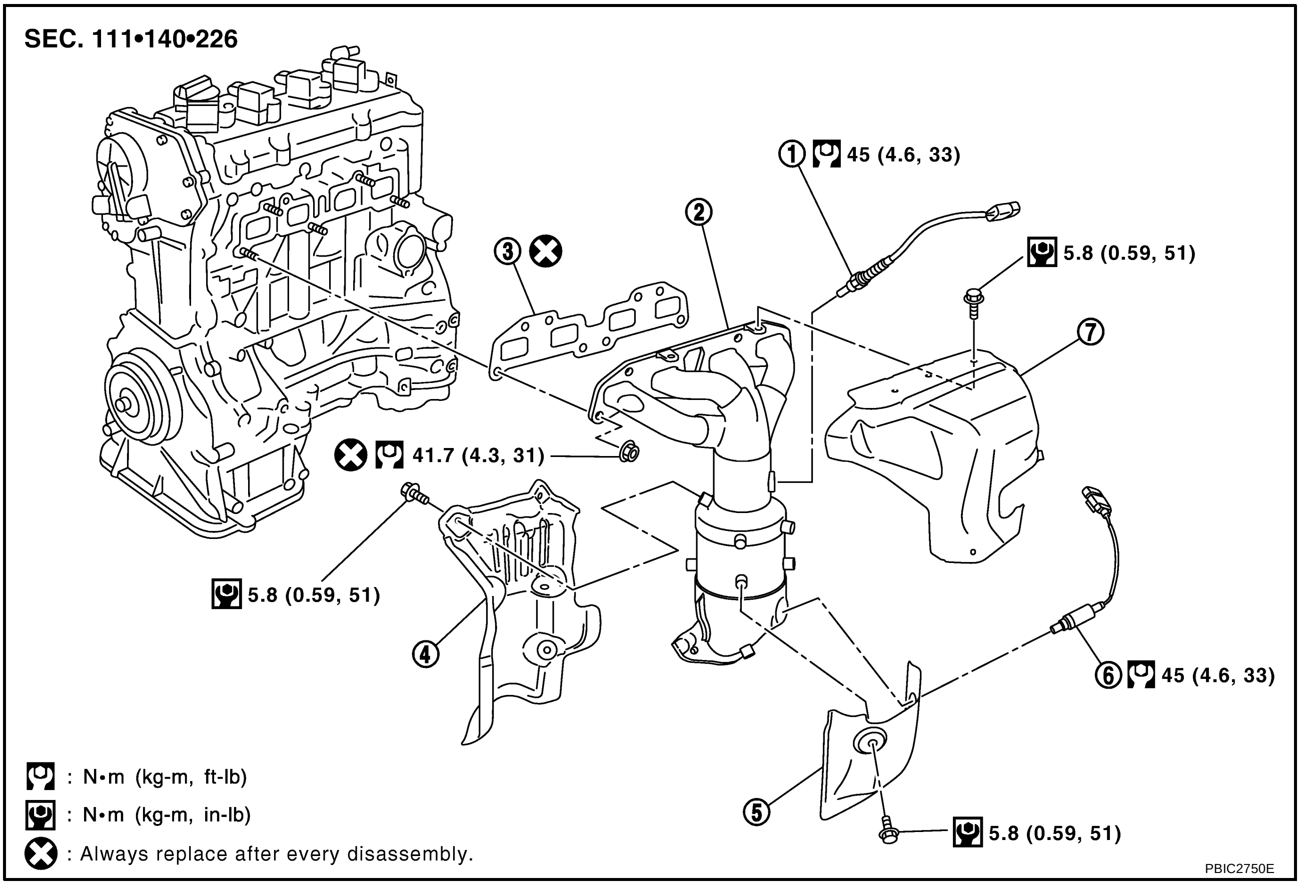


| | | | | | |
|---|---|---|---|---|---|
| 1. | Heated oxygen sensor 1 | 2. | Exhaust manifold and three way catalyst assembly | 3. | Gasket |
| 4. | Three way catalyst cover | 5. | Exhaust manifold cover (lower) | 6. | Heated oxygen sensor 2 |
| 7. | Exhaust manifold cover (upper) | | | | |

### REMOVAL

1. Remove heated oxygen sensors with the following procedure:

a. Disconnect harness connector of each heated oxygen sensor, and harness from bracket and middle clamp.

b. Using the heated oxygen sensor wrench [SST], remove heated oxygen sensors.

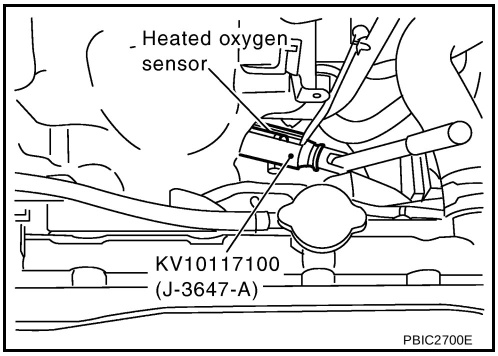


**CAUTION:**

- **Be careful not to damage heated oxygen sensor.**
- **Discard any heated oxygen sensor which has been dropped from a height of more than 0.5 m (19.7 in) onto a hard surface such as a concrete floor; replace with a new one.**

2. Remove exhaust front tube. Refer to EX-2, "EXHAUST SYSTEM" .
3. Remove drive belt. Refer to EM-11, "DRIVE BELTS" .
4. Remove alternator. Refer to SC-20, "CHARGING SYSTEM" .
5. Remove exhaust manifold cover (upper).

6. Loosen nuts in reverse order as shown in the figure to remove exhaust manifold and three way catalyst assembly.

   **NOTE:**
   Disregard No. 6 and 7 when loosening.

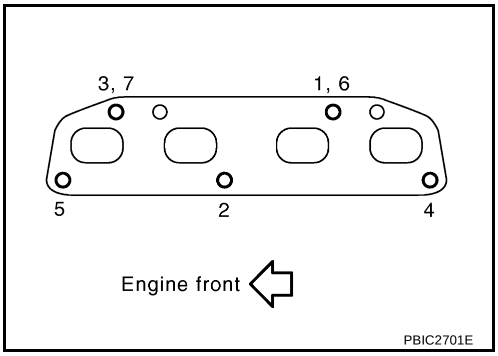


7. Remove gasket.

   **CAUTION:**
   **Cover engine openings to avoid entry of foreign materials.**

8. Remove exhaust manifold cover (lower) and three way catalyst cover from exhaust manifold and three way catalyst assembly.

## INSPECTION AFTER REMOVAL

### Surface Distortion

- Using a straightedge and a feeler gauge, check the surface distortion of exhaust manifold and three way catalyst assembly mating surface.

  **Limit : 0.3 mm (0.012 in)**

- If it exceeds the limit, replace exhaust manifold and three way catalyst assembly.

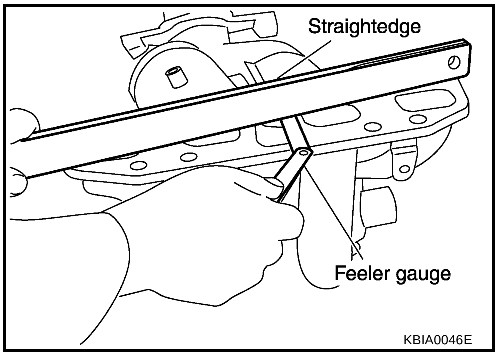


## INSTALLATION

Note the following, and install in the reverse order of removal.

### Exhaust Manifold

- If stud bolts were removed, install them and tighten to the specified torque below.

  **: 14.7 N·m (1.5 kg-m, 11 ft-lb)**

- Tighten nuts in numerical order as shown in the figure.

  **NOTE:**
  No. 6 and 7 mean double tightening of bolts No. 1 and 3.

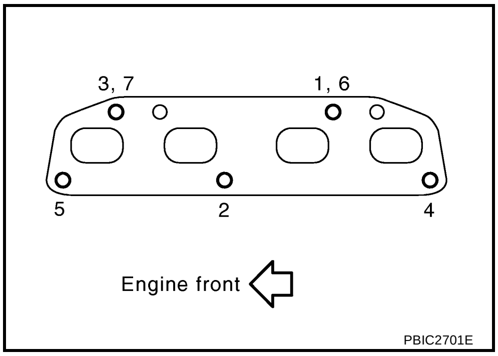


### Heated Oxygen Sensor

**CAUTION:**

- **Before installing new heated oxygen sensor, clean exhaust system threads using a heated oxygen sensor thread cleaner (commercial service tool: J-43897-18 or J-43897-12) and apply anti-seize lubricant (commercial service tool).**
- **Do not over torque heated oxygen sensor. Doing so may cause damage to heated oxygen sensor, resulting in the “MIL” coming on.**

# OIL PAN AND OIL STRAINER

PFP:11110

## Removal and Installation

ABS00CJ5

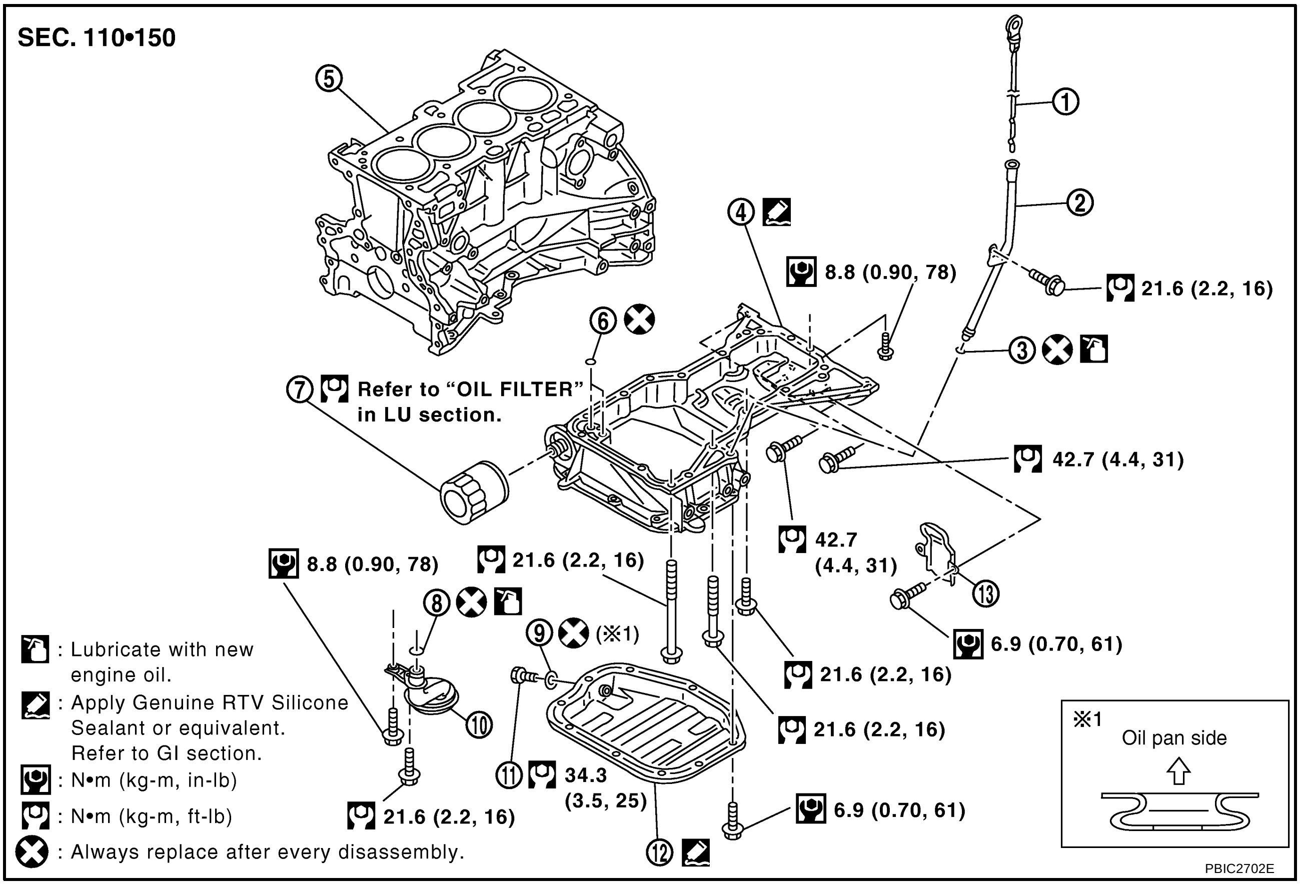


| | | |
|---|---|---|
| 1. Oil level gauge | 2. Oil level gauge guide | 3. O-ring |
| 4. Oil pan (upper) | 5. Cylinder block | 6. O-ring |
| 7. Oil filter | 8. O-ring | 9. Drain plug washer |
| 10. Oil strainer | 11. Drain plug | 12. Oil pan (lower) |
| 13. Rear plate cover | | |

### REMOVAL

**WARNING:**

**To avoid the danger of being scalded, do not drain the engine oil when the engine is hot.**

1. Remove RH and LH undercovers.

   **NOTE:**

   When removing oil pan (lower) or oil strainer only, this step is unnecessary.

2. Drain engine oil. Refer to LU-7, "Changing Engine Oil" .

   **CAUTION:**

   - **Perform this step when the engine is cold.**
   - **Do not spill engine oil on drive belt.**

3. Remove oil pan (lower) with the following procedure:

a. Loosen mounting bolts in reverse order as shown in the figure with power tool.

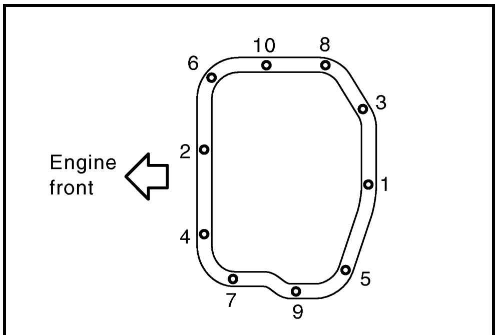

PBIC2703E

b. Insert the seal cutter [SST] between oil pan (upper) and oil pan (lower).

**CAUTION:**

- **Be careful not to damage the mating surfaces.**
- **Do not insert a screwdriver, this will damage the mating surfaces.**

c. Slide seal cutter by tapping on the side of the tool with a hammer. Remove oil pan (lower).

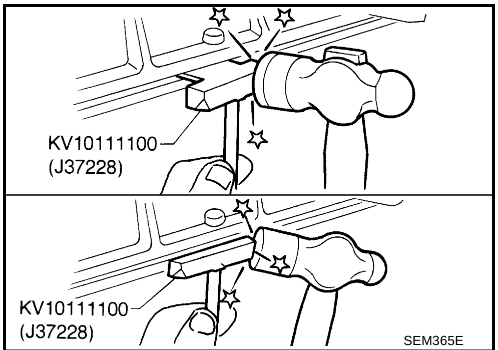

SEM365E

4. Remove oil strainer.
5. Remove oil pan (upper) with the following procedure:

a. Remove drive belt. Refer to EM-11, "DRIVE BELTS" .

b. Remove oil filter. Refer to LU-9, "OIL FILTER" .

c. Remove A/C compressor with piping connected. And locate it aside temporarily with ropes or equivalent not to disturb the following work. Refer to ATC-122, "Removal and Installation of Compressor" (Automatic A/C models) or MTC-82, "Removal and Installation of Compressor" (Manual A/C models).

d. Remove oil level gauge guide.

e. Remove exhaust front tube and its support. Refer to EX-2, "EXHAUST SYSTEM" .

f. Set a suitable transmission jack under transaxle and hoist the engine with engine slinger, and then remove center member with power tool. Refer to EM-73, "Removal and Installation (2WD Models)" (2WD models) or EM-77, "Removal and Installation (AWD Models)" (AWD models).

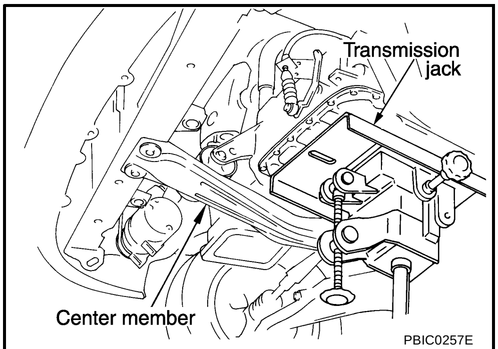

PBIC0257E

g. Remove rear engine mounting bracket (2WD models). Refer to EM-73, "Removal and Installation (2WD Models)" .

h. Remove rear plate cover, and four transaxle joint bolts which pierce oil pan (upper). Refer to MT-17, "TRANSAXLE ASSEMBLY" (M/T models) or AT-269, "TRANSAXLE ASSEMBLY" (A/T models).

i. Loosen bolts in reverse order as shown in the figure with power tool.

**NOTE:**
Disregard No.12 and 17 when loosening.

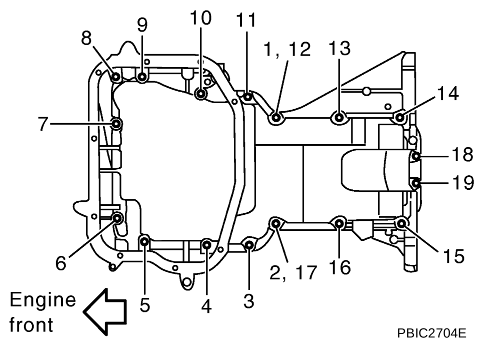

PBIC2704E

j. Insert the seal cutter [SST] between oil pan (upper) and cylinder block, and slide it by tapping on the side of the tool with a hammer. Remove oil pan (upper).

**CAUTION:**
- **Be careful not to damage the mating surfaces.**
- **Do not insert a screwdriver, this will damage the mating surfaces.**

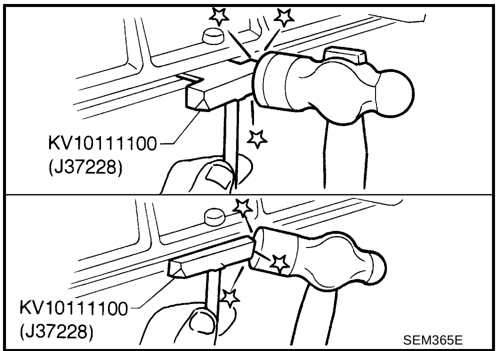

SEM365E

6. Remove O-rings at front cover side.

## INSPECTION AFTER REMOVAL

Clean oil strainer if any object attached.

## INSTALLATION

1. Install oil pan (upper) with the following procedure:
a. Use a scraper to remove old liquid gasket from mating surfaces.
   - Also remove the old liquid gasket from mating surface of cylinder block.
   - Remove old liquid gasket from the bolt holes and threads.

**CAUTION:**
**Do not scratch or damage the mating surfaces when cleaning off old liquid gasket.**

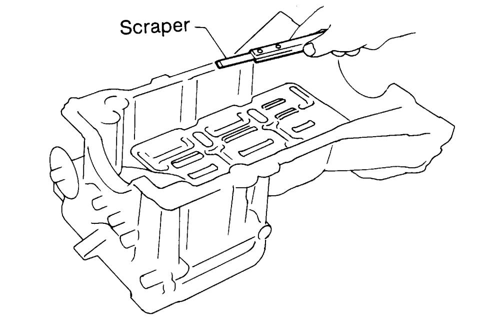

MEM108A

b. Apply a continuous bead of liquid gasket with the tube presser [SST: WS39930000 ( — )] as shown in the figure.
**Use Genuine RTV Silicone Sealant or equivalent. Refer to GI-48, "RECOMMENDED CHEMICAL PRODUCTS AND SEALANTS" .**

**CAUTION:**
- **Apply liquid gasket to outside of bolt hole for the positions shown by arrows.**
- **Attaching should be done within 5 minutes after coating.**

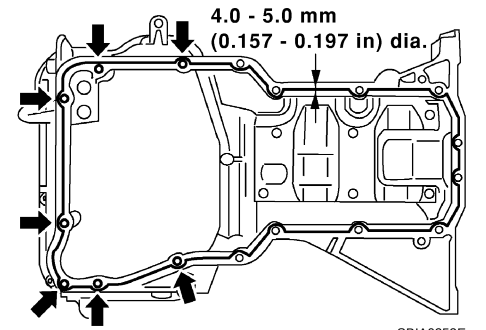

SBIA0253E

c. Install new O-rings at front cover side.

d. Tighten bolts in numerical order as shown in the figure.

**NOTE:**

- No. 12 and 17 mean double tightening of bolts No. 1 and 2.
- Refer to the following for locating bolts.

**M6 × 20 mm (0.79 in) : No. 18, 19**

**M8 × 25 mm (0.98 in) : No. 1, 2, 3, 11**

**M8 × 45 mm (1.77 in) : No. 4, 10, 13, 14, 15, 16**

**M8 × 100 mm (3.97 in) : No. 5, 6, 7, 8, 9**

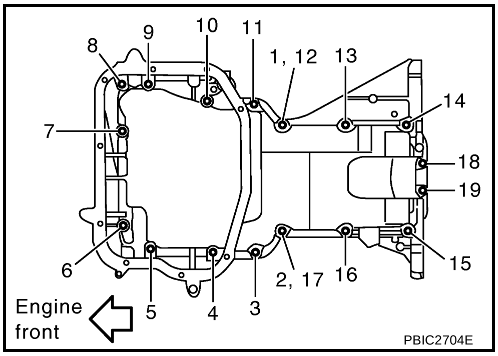


e. Tighten transaxle joint bolts. Refer to MT-17, "TRANSAXLE ASSEMBLY" (M/T models) or AT-269, "TRANSAXLE ASSEMBLY" (A/T models).

f. Install rear plate cover.

2. Install oil strainer.
3. Install oil pan (lower) with the following procedure:

a. Use a scraper to remove old liquid gasket from mating surfaces.

- Also remove old liquid gasket from mating surface of oil pan (upper).
- Remove old liquid gasket from the bolt holes and thread.

**CAUTION:**

**Do not scratch or damage the mating surfaces when cleaning off old liquid gasket.**

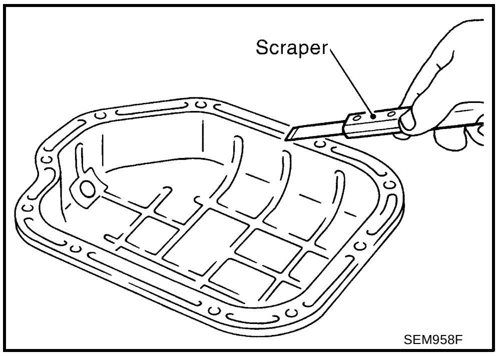


b. Apply a continuous bead of liquid gasket with the tube presser [SST: WS39930000 ( — )] as shown in the figure.

**Use Genuine RTV Silicone Sealant or equivalent. Refer to GI-48, "RECOMMENDED CHEMICAL PRODUCTS AND SEALANTS" .**

**CAUTION:**

**Attaching should be done within 5 minutes after coating.**

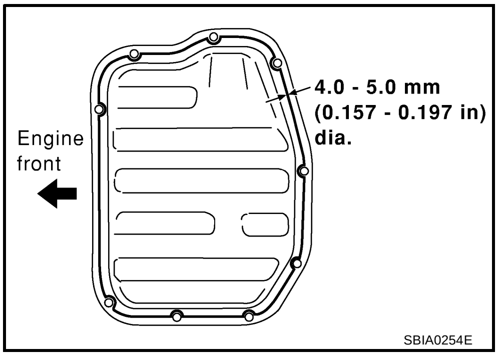


c. Tighten bolts in numerical order as shown in the figure.

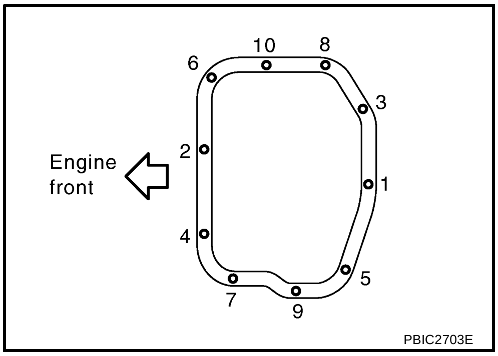


4. Install oil pan drain plug.

- Refer to the figure of components of former page for installation direction of washer. Refer to EM-22, "Removal and Installation" .

5. Install in the reverse order of removal after this step.

**NOTE:**
Pour engine oil at least 30 minutes after oil pan is installed.

## INSPECTION AFTER INSTALLATION

1. Check the engine oil level, and adjust the level. Refer to LU-6, "ENGINE OIL" .
2. Start the engine, and make sure there is no leaks of engine oil.
3. Stop the engine and wait for 10 minutes.
4. Check the engine oil level again. Refer to LU-6, "ENGINE OIL" .

# IGNITION COIL

PFP:22448

## Removal and Installation

ABS00CJ6

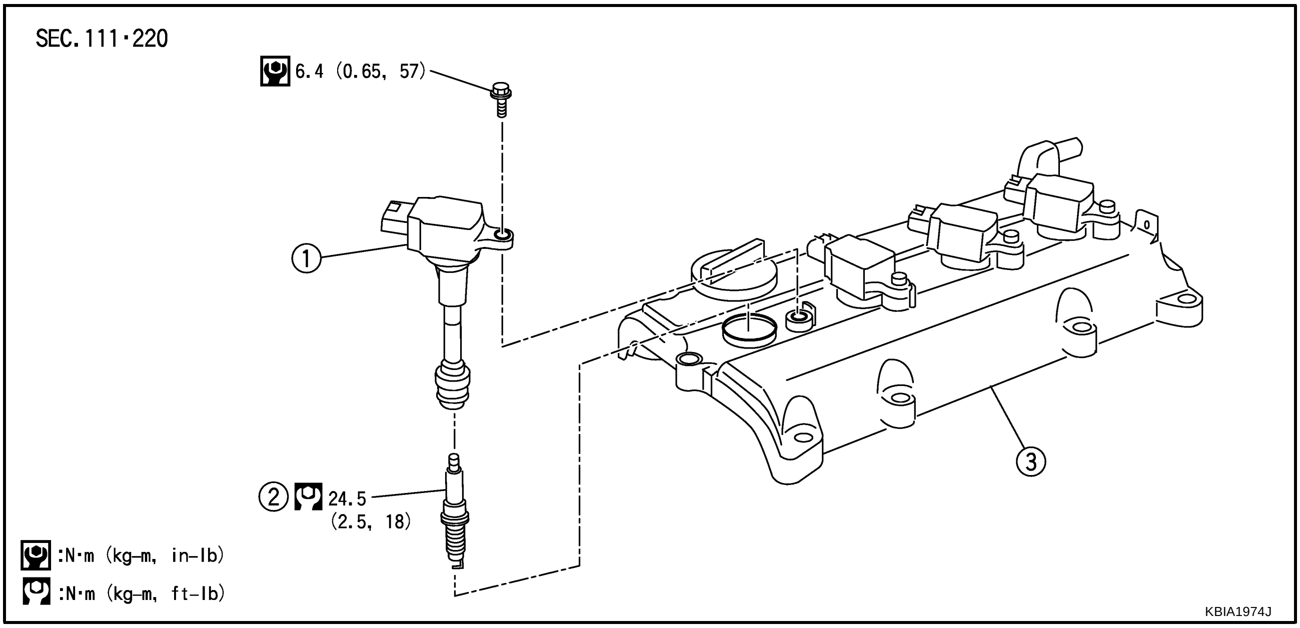


1. Ignition coil
2. Spark plug
3. Rocker cover

### REMOVAL

1. Remove engine cover. Refer to EM-16, "INTAKE MANIFOLD" .
2. Disconnect harness connector from ignition coil.
3. Remove ignition coil.

   **CAUTION:**

   **Do not drop or shock it.**

### INSTALLATION

Install in the reverse order of removal.

# SPARK PLUG (PLATINUM-TIPPED TYPE)

PFP:22401

## Removal and Installation

ABS00DCN

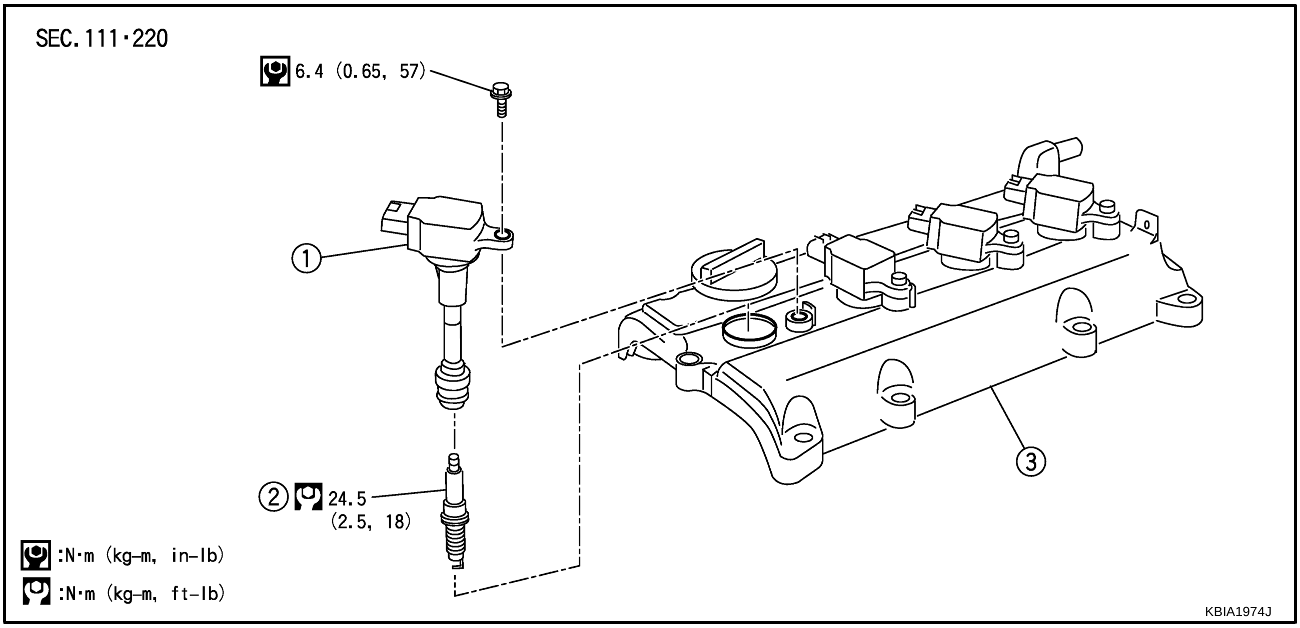


1. Ignition coil
2. Spark plug
3. Rocker cover

### REMOVAL

1. Remove engine cover. Refer to EM-16, "INTAKE MANIFOLD" .
2. Remove ignition coil. Refer to EM-27, "IGNITION COIL" .
3. Remove spark plug with a spark plug wrench (commercial service tool).

   **CAUTION:**

   **Do not drop or shock it.**

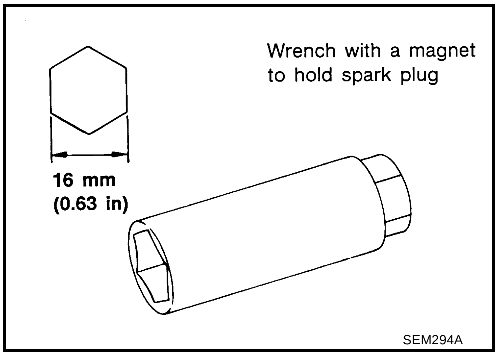


### INSPECTION AFTER REMOVAL

**Use standard type spark plug for normal condition.**

Hot type spark plug is suitable when fouling occurs with standard type spark plug under conditions such as:

- Frequent engine starts
- Low ambient temperatures

Cold type spark plug is suitable when spark plug knock occurs with standard type spark plug under conditions such as:

- Extended highway driving
- Frequent high engine revolution

| Make | NGK |
|---|---|
| Standard type | PLFR5A-11 |
| Hot type | PLFR4A-11 |
| Cold type | PLFR6A-11 |

**Gap (Nominal) : 1.1 mm (0.043 in)**

**CAUTION:**
- **Do not drop or shock spark plug.**
- **Do not use wire brush for cleaning.**
- **If plug tip is covered with carbon, spark plug cleaner may be used.**

  **Cleaner air pressure:**

  **Less than 588 kPa (6 kg/cm$^2$ , 85 psi)**

  **Cleaning time:**

  **Less than 20 seconds**

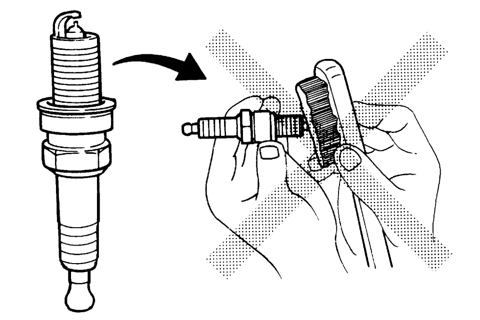

SMA773C

- **Checking and adjusting plug gap is not required between change intervals.**

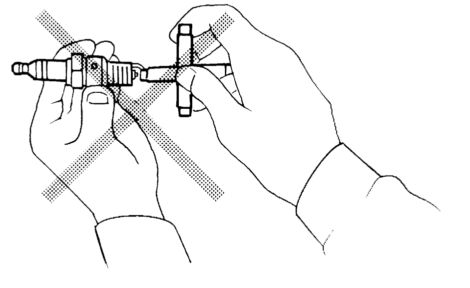


SMA806CA

## INSTALLATION

Install in the reverse order of removal.

A
EM
C
D
E
F
G
H
I
J
K
L
M

# FUEL INJECTOR AND FUEL TUBE

PFP:16600

## Removal and Installation

ABS00CJ9

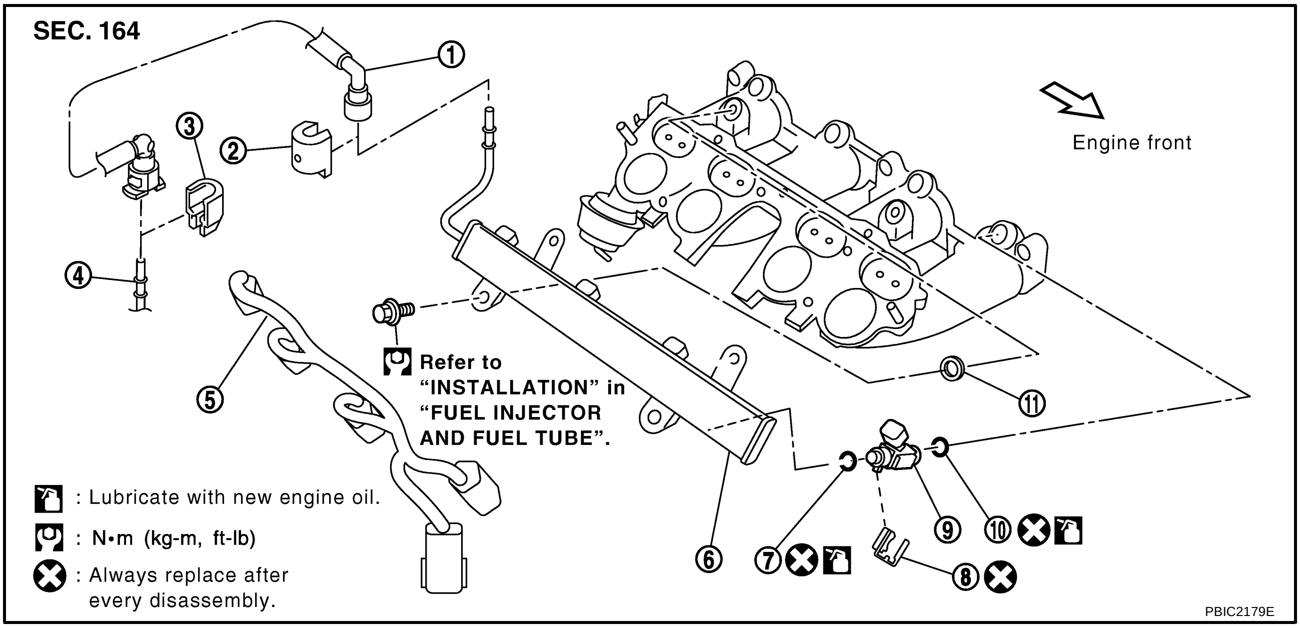


| | | | | | |
|---|---|---|---|---|---|
| 1. | Fuel feed hose | 2. | Quick connector cap (engine side) | 3. | Quick connector cap (vehicle side) |
| 4. | Centralized under-floor piping | 5. | Sub-harness | 6. | Fuel tube |
| 7. | O-ring (black) | 8. | Clip | 9. | Fuel injector |
| 10. | O-ring (green) | 11. | Insulator | | |

**CAUTION:**

**Do not remove or disassemble parts unless instructed as shown in the figure.**

### REMOVAL

**WARNING:**

- **Put a "CAUTION: INFLAMMABLE" sign in the workshop.**
- **Be sure to work in a well ventilated area and furnish workshop with a $CO_2$ fire extinguisher.**
- **Do not smoke while servicing fuel system. Keep open flames and sparks away from the work area.**

1. Release fuel pressure. Refer to EC-90, "FUEL PRESSURE RELEASE" .
2. Remove engine cover. Refer to EM-16, "INTAKE MANIFOLD" .
3. Remove air cleaner case upper, mass air flow sensor and air duct assembly. Refer to EM-14, "AIR CLEANER AND AIR DUCT" .
4. Disconnect quick connectors at the engine side and the vehicle side as follows, and remove fuel feed hose.

   **CAUTION:**

   **Disconnect quick connector by using the quick connector release [SST: J-45488], not by picking out retainer tabs.**

   **NOTE:**

   There is quick connector for the engine side and for the vehicle side, and they have different shapes. But disconnection is same procedure. The following procedure shows the engine side.

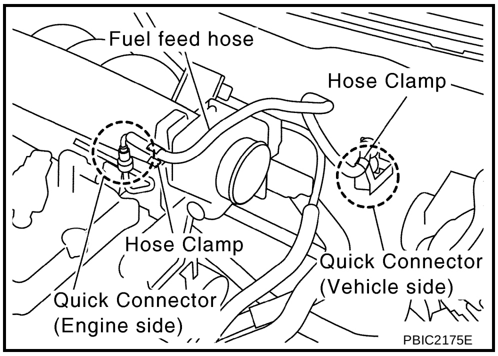

a. Remove quick connector cap (engine side).

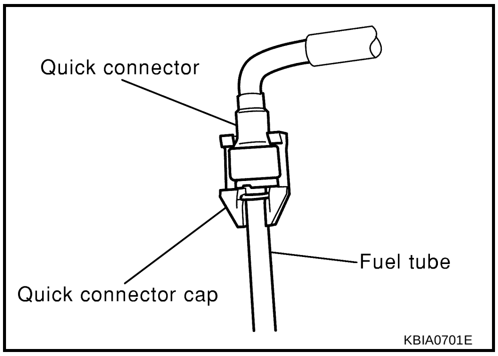


b. With the sleeve side of quick connector release facing quick connector, install quick connector release onto fuel tube.

c. Insert quick connector release into quick connector until sleeve contacts and goes no further. Hold quick connector release on that position.

**CAUTION:**

**Inserting quick connector release hard will not disconnect quick connector. Hold quick connector release where it contacts and goes no further.**

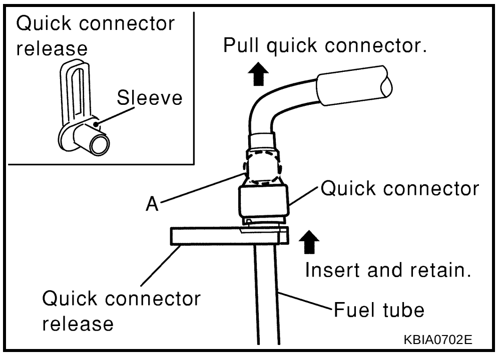


d. Draw and pull out quick connector straight from fuel tube.

**CAUTION:**

- **Pull quick connector holding "A" position in the figure.**
- **Do not pull with lateral force applied. O-ring inside quick connector may be damaged.**
- **Prepare container and cloth beforehand as fuel will leak out.**
- **Avoid fire and sparks.**
- **Keep parts away from heat source. Especially, be careful when welding is performed around them.**
- **Do not expose parts to battery electrolyte or other acids.**
- **Do not bend or twist connection between quick connector and fuel feed hose during installation/removal.**
- **To keep clean the connecting portion and to avoid damage and foreign materials, cover them completely with plastic bags or something similar.**

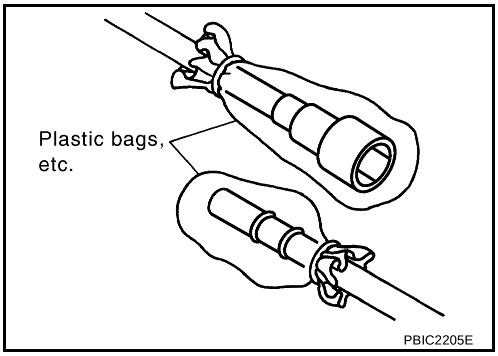


5. Remove intake manifold collector. Refer to EM-16, "INTAKE MANIFOLD" .
6. Disconnect sub-harness for fuel injector.

7. Loosen mounting bolts in reverse order as shown in the figure.
8. Remove fuel tube and fuel injector assembly and insulators.

**CAUTION:**

- **When removing, be careful to avoid any interference with fuel injector.**
- **Use a shop cloth to absorb any fuel leaks from fuel tube.**

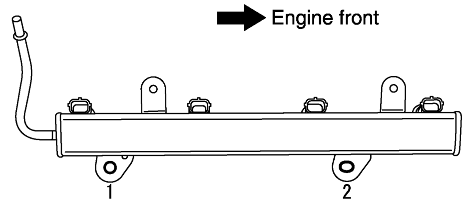

KBIA0239E

9. Remove fuel injector from fuel tube with the following procedure:

a. Open and remove clip.

b. Remove fuel injector from fuel tube by pulling straight.

**CAUTION:**

- **Be careful with remaining fuel that may go out from fuel tube.**
- **Be careful not to damage fuel injector nozzle during removal.**
- **Do not bump or drop fuel injector.**
- **Do not disassemble fuel injector.**

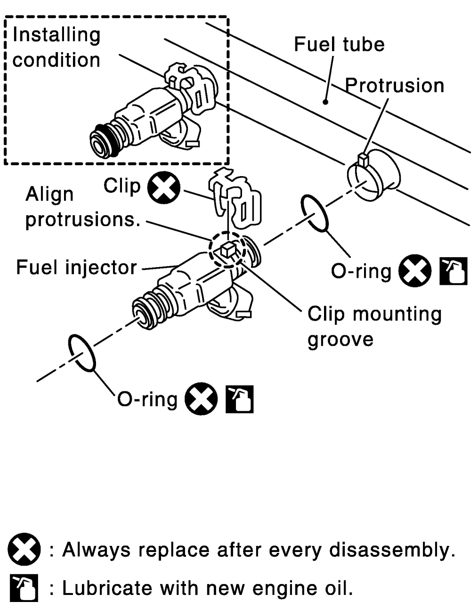

SBIA0364E

## INSTALLATION

1. Note the following, and install O-rings to fuel injector.

**CAUTION:**

- **Upper and lower O-rings are different. Be careful not to confuse them.**

| | |
|---|---|
| **Fuel tube side** | **: Black** |
| **Nozzle side** | **: Green** |

- **Handle O-ring with bare hands. Do not wear gloves.**
- **Lubricate O-ring with new engine oil.**
- **Do not clean O-ring with solvent.**
- **Make sure that O-ring and its mating part are free of foreign material.**
- **When installing O-ring, be careful not to scratch it with tool or fingernails. Also be careful not to twist or stretch O-ring. If O-ring was stretched while it was being attached, do not insert it quickly into fuel tube.**
- **Insert O-ring straight into fuel tube. Do not decenter or twist it.**

2. Install fuel injector to fuel tube with the following procedure:
a. Insert clip into clip attachment groove on fuel injector.
   - Insert clip so that protrusion “A” of fuel injector matches cutout “A” of clip.

   **CAUTION:**
   - **Do not reuse clip. Replace it with a new one.**
   - **Be careful to keep clip from interfering with O-ring. If interference occurs, replace O-ring.**

b. Insert fuel injector into fuel tube with clip attached.
   - Insert it while matching it to the axial center.
   - Insert fuel injector so that protrusion “B” of fuel tube matches cutout “B” of clip.
   - Make sure that fuel tube flange is securely fixed in flange fixing groove on clip.

c. Make sure that installation is complete by checking that fuel injector does not rotate or come off.
   - Make sure that protrusions of fuel injectors are aligned with cutouts of clips after installation.

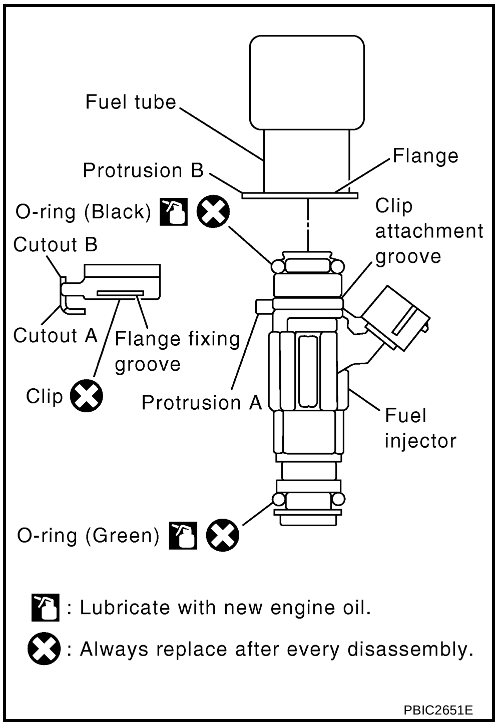


3. Install fuel tube and fuel injector assembly with the following procedure:

   **CAUTION:**
   **When installing, be careful to avoid any interference with fuel injector.**

a. Insert the tip of each fuel injector into intake manifold.
b. Tighten mounting bolts evenly in two steps in numerical order as shown in the figure.

   **1st step**
   **: 10.1 N·m (1.0 kg-m, 7 ft-lb)**

   **2nd step**
   **: 23.6 N·m (2.4 kg-m, 17 ft-lb)**

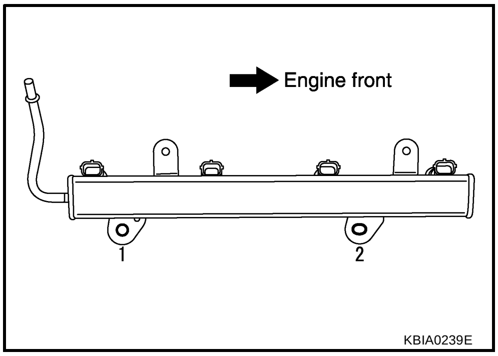


4. Connect sub-harness for fuel injector.
5. Install intake manifold collector. Refer to EM-16, "INTAKE MANIFOLD" .
6. Note the following, and connect quick connectors at the engine side and the vehicle side to install fuel feed hose.

   **NOTE:**
   There is quick connector for the engine side and for the vehicle side, and they have different shapes. But connection is same procedure. The following procedure shows the engine side.

a. Check the connection for foreign material and damage.

b. Align center to insert quick connector straightly into fuel tube.

**NOTE:**
The figure shows the engine side as an example.

- Insert quick connector to fuel tube until the top spool on fuel tube is inserted completely and the second level spool is positioned slightly below quick connector bottom end.

**CAUTION:**

- **Hold "A" position in the figure when inserting fuel tube into quick connector.**
- **Carefully align center to avoid inclined insertion to prevent damage to O-ring inside quick connector.**
- **Insert until you hear a "click" sound and actually feel the engagement.**
- **To avoid misidentification of engagement with a similar sound, be sure to perform the next step.**

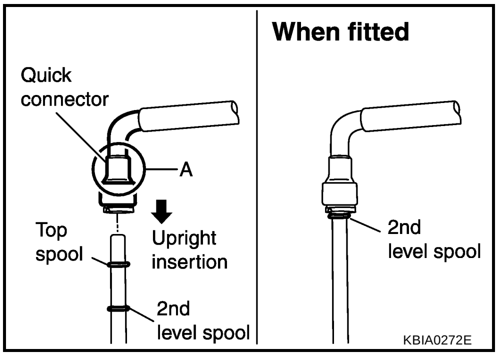


c. Before clamping fuel feed hose with hose clamps, pull quick connector hard by hand holding "A" position. Make sure it is completely engaged (connected) so that it does not come out from fuel feed tube.

d. Install quick connector cap to quick connector connection. (Both on the engine side and the vehicle side)

- Install so that the arrow mark on the side faces up.

**CAUTION:**

- **Make sure that quick connector and fuel tube are securely fit into quick connector cap installation groove.**
- **If quick connector cap cannot be installed smoothly, quick connector may have not been installed correctly. Check the connection again.**

**NOTE:**
There is quick connector cap for the engine side and for the vehicle side, and they have different shapes. The figure shows the engine side as an example.

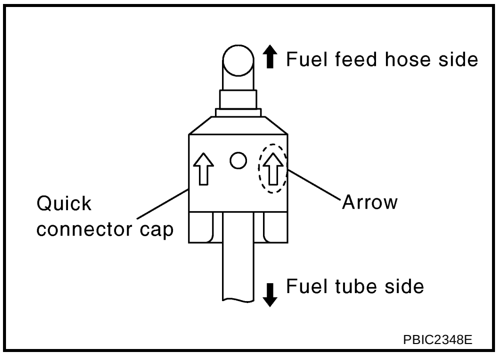


7. Install fuel feed hose to hose clamp.
8. Install in the reverse order of removal after this step.

## INSPECTION AFTER INSTALLATION

### Check on Fuel Leaks

1. Apply fuel pressure to fuel lines with turning ignition switch "ON" (with the engine stopped). Then make sure there are no fuel leaks at connections.

   **NOTE:**
   Use mirrors for checking on invisible points.

2. Start the engine. With engine speed increased, make sure again there are no fuel leaks at connections.

   **CAUTION:**
   **Do not touch the engine immediately after stopped as the engine becomes extremely hot.**

# ROCKER COVER

PFP:13264

## Removal and Installation

ABS00CJA

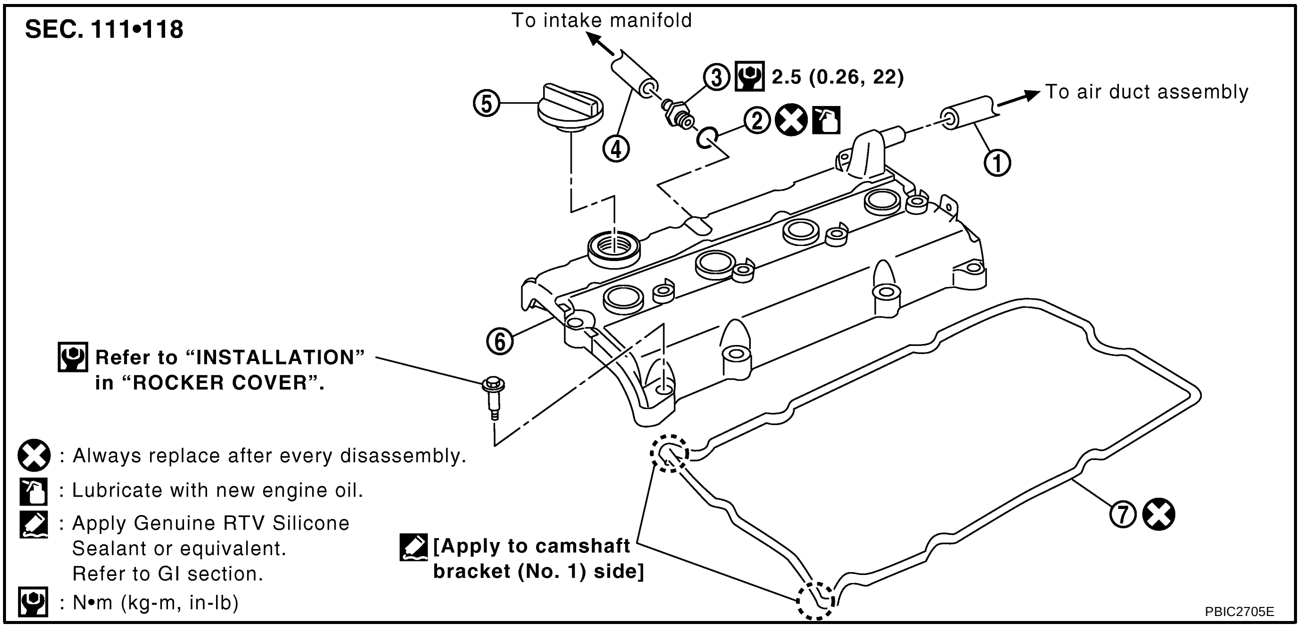


| | | | | | |
|---|---|---|---|---|---|
| 1. | PCV hose | 2. | O-ring | 3. | PCV valve |
| 4. | PCV hose | 5. | Oil filler cap | 6. | Rocker cover |
| 7. | Rocker cover gasket | | | | |

### REMOVAL

1. Remove engine cover. Refer to EM-16, "INTAKE MANIFOLD" .
2. Disconnect PCV hose from rocker cover.
3. Remove ignition coil. Refer to EM-27, "IGNITION COIL" .
4. Remove PCV valve and O-ring from rocker cover, if necessary.
5. Remove oil filler cap from rocker cover, if necessary.
6. Loosen bolts in reverse order shown in the figure.

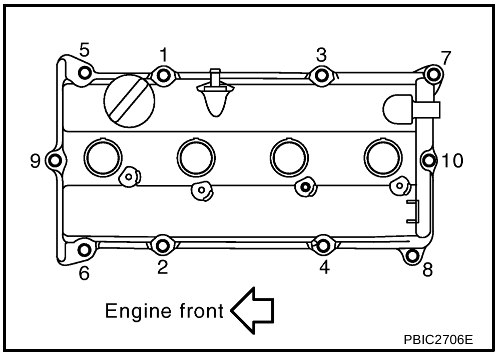


7. Remove rocker cover gasket from rocker cover.
8. Use scraper to remove all traces of liquid gasket from cylinder head and camshaft bracket (No. 1).

   **CAUTION:**
   **Do not scratch or damage the mating surface when cleaning off old liquid gasket.**

## INSTALLATION

1. Apply liquid gasket to the position shown in the figure with the following procedure:

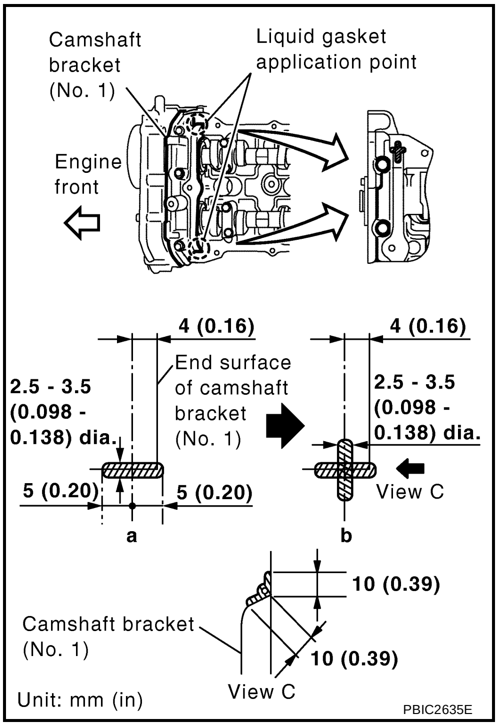


a. Refer to figure “a” to apply liquid gasket to joint part of camshaft bracket (No. 1) and cylinder head.
b. Refer to figure “b” to apply liquid gasket in 90 degrees to figure “a”.
   **Use Genuine RTV Silicone Sealant or equivalent. Refer to** GI-48, "RECOMMENDED CHEMICAL PRODUCTS AND SEALANTS" **.**

2. Install rocker cover gasket to rocker cover.
3. Install rocker cover.
   - Check if rocker cover gasket is not dropped from the installation groove of rocker cover.
4. Tighten bolts in two steps separately in numerical order as shown in the figure.

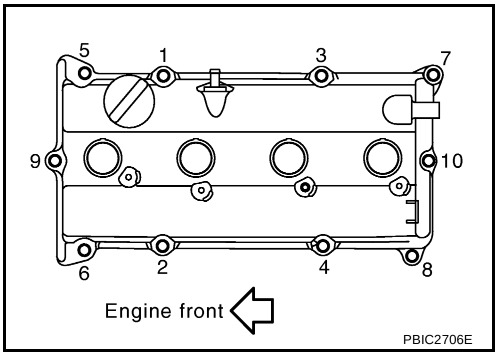


**1st step**

**: 2.0 N·m (0.2 kg-m, 18 in-lb)**

**2nd step**

**: 8.3 N·m (0.85 kg-m, 73 in-lb)**

5. Install in the reverse order of removal after this step.

# CAMSHAFT

PFP:13001

## Removal and Installation

ABS00E9K

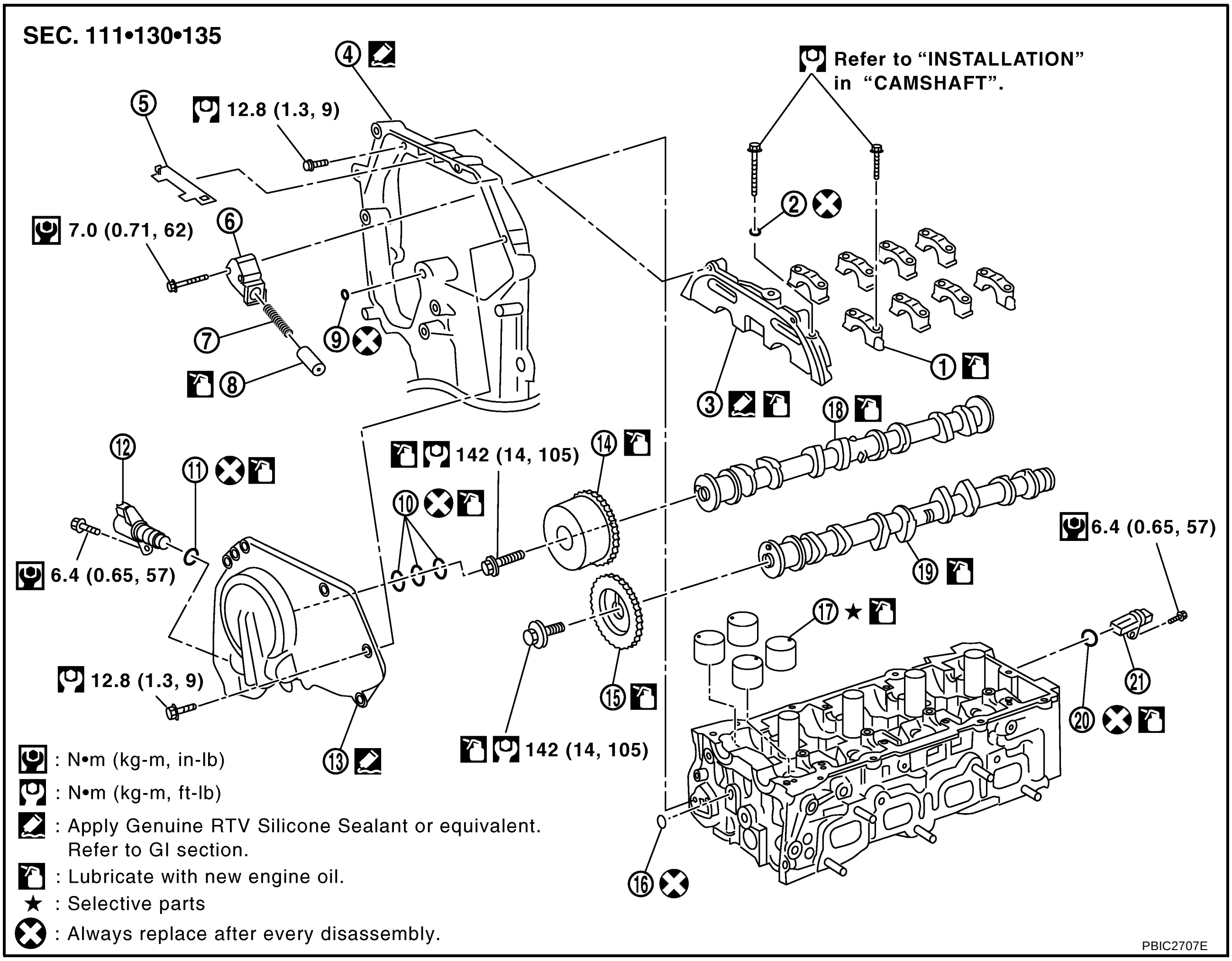


| | | | | | |
|---|---|---|---|---|---|
| 1. | Camshaft bracket (No. 2 to 5) | 2. | Seal washer | 3. | Camshaft bracket (No. 1) |
| 4. | Front cover | 5. | Chain guide | 6. | Chain tensioner |
| 7. | Spring | 8. | Chain tensioner plunger | 9. | O-ring |
| 10. | Oil ring | 11. | O-ring | 12. | Intake valve timing control solenoid valve |
| 13. | Intake valve timing control cover | 14. | Camshaft sprocket (INT) | 15. | Camshaft sprocket (EXH) |
| 16. | O-ring | 17. | Valve lifter | 18. | Camshaft (INT) |
| 19. | Camshaft (EXH) | 20. | O-ring | 21. | Camshaft position sensor (PHASE) |

**NOTE:**
This section describes removal/installation procedure of camshaft without removing front cover. If front cover is removed or installed, removal of camshaft bracket (No. 1) is easier before step 9 and installation is easier after step 4. Regarding removal and installation of front cover, refer to EM-49, "TIMING CHAIN" .

### REMOVAL

1. Remove the following parts.
   - Engine cover; Refer to EM-16, "INTAKE MANIFOLD" .
   - Ignition coil; Refer to EM-27, "IGNITION COIL" .
   - Rocker cover; Refer to EM-35, "ROCKER COVER" .
2. Remove reservoir tank of radiator from bracket, and move it aside. Refer to CO-11, "RADIATOR" .
3. Remove power steering reservoir tank from bracket to move power steering piping. Refer to PS-33, "HYDRAULIC LINE" .

**CAUTION:**
**To avoid power steering fluid leakage, temporarily fix reservoir tank of power steering oil pump vertically.**

4. Remove intake valve timing control cover with the following procedure:
a. Disconnect intake valve timing control solenoid valve harness connector.
b. Disconnect ground cables and remove harness clip.
c. Remove intake valve timing control solenoid valve, if necessary.
d. Loosen bolts in reverse order as shown in the figure.
e. Use the seal cutter [SST: KV10111100 (J37228)] or suitable tool to cut liquid gasket for removal.

**CAUTION:**
**Be careful not to damage the mating surfaces.**

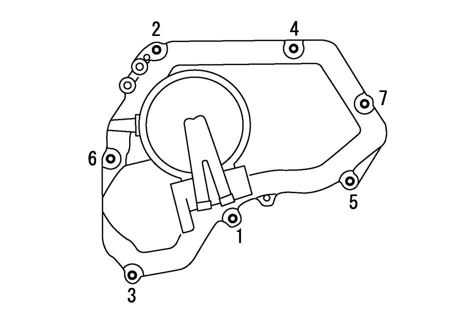

KBIA0085E

5. Pull chain guide between camshaft sprockets out through front cover.
6. Set No. 1 cylinder at TDC on its compression stroke with the following procedure:
a. Open splash guard on RH undercover.
b. Rotate crankshaft pulley clockwise and align TDC mark to timing indicator on front cover.

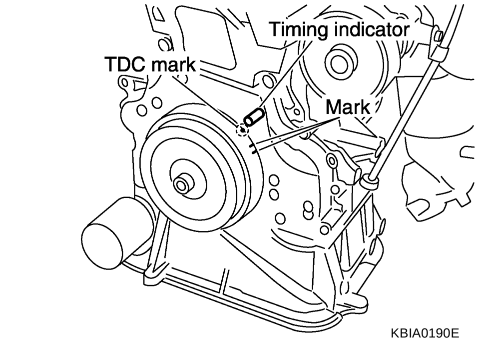

KBIA0190E

c. At the same time, make sure that the mating marks on camshaft sprockets are located as shown in the figure.
   - If not, rotate crankshaft pulley one more turn to align mating marks to the positions in the figure.

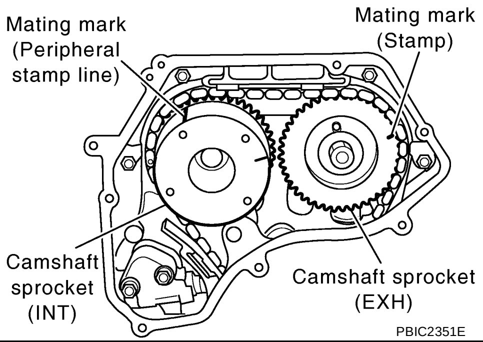

PBIC2351E

7. Remove camshaft sprockets with the following procedure:
a. Put indelible paint marks on the timing chain link plates aligning with the mating marks on camshaft sprockets.

b. Push in chain tensioner plunger. Insert a stopper pin into hole on chain tensioner body to secure chain tensioner plunger and remove chain tensioner.

**CAUTION:**

**Be careful not to drop mounting bolts inside front cover.**

**NOTE:**

Use approximately 0.5 mm (0.02 in) dia. hard metal pin as a stopper pin.

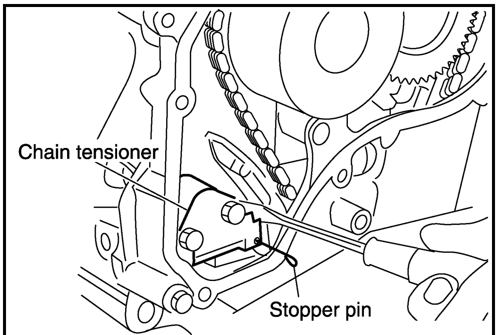

KBIA0048E

c. Secure hexagonal part of camshaft with a wrench. Loosen camshaft sprocket mounting bolts and remove camshaft sprockets.

**CAUTION:**

- **Do not loosen the mounting bolts with securing anything other than the camshaft hexagonal part or with tensioning timing chain.**
- **Do not rotate crankshaft or camshaft while timing chain is removed. It causes interference between valve and piston.**

**NOTE:**

Chain tension holding work is not necessary. Crankshaft sprocket and timing chain do not disconnect structurally while front cover is attached.

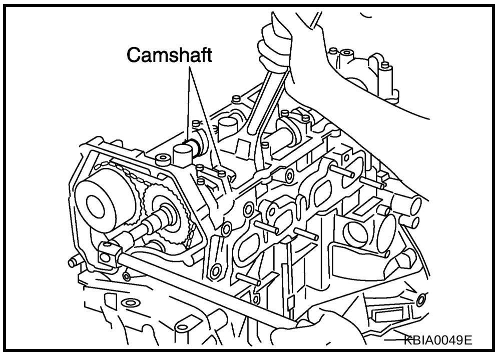

KBIA0049E

8. Remove camshaft position sensor (PHASE) from cylinder head back side.

**CAUTION:**

- **Handle carefully to avoid dropping and shocks.**
- **Do not disassemble.**
- **Do not allow metal powder to adhere to magnetic part at sensor tip.**
- **Do not place the sensor in a location where it is exposed to magnetism.**

9. Loosen mounting bolts in reverse order as shown in the figure, and remove camshaft brackets.
   - Remove camshaft bracket (No. 1) by slightly tapping it with a plastic hammer.

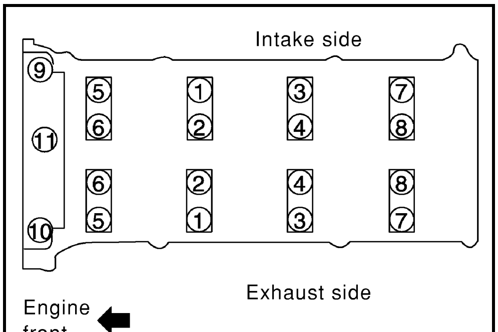

SBIA0255E

10. Remove camshafts.
11. Remove valve lifters.
    - Identify installation positions, and store them without mixing them up.

## INSPECTION AFTER REMOVAL

### Camshaft Runout

1. Put V-block on a precise flat table, and support No. 2 and 5 journals of camshaft.

   **CAUTION:**

   **Do not support No. 1 journal (on the side of camshaft sprocket) because it has a different diameter from the other four locations.**

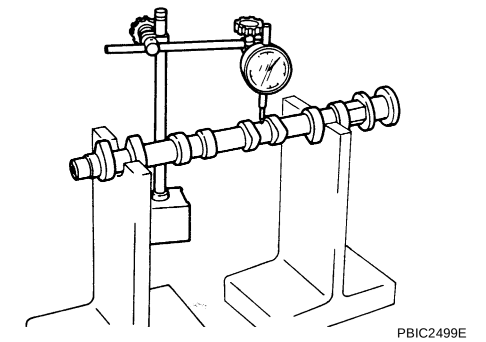
PBIC2499E

2. Set a dial indicator vertically to No. 3 journal.
3. Turn camshaft to one direction with hands, and measure the camshaft runout on the dial indicator. (Total indicator reading)

   **Standard: Less than 0.02 mm (0.0008 in).**

4. If out of the standard, replace camshaft.

### Camshaft Cam Height

1. Measure the camshaft cam height with a micrometer.

   **Standard:**

   **Intake : 45.665 - 45.855 mm (1.7978 - 1.8053 in)**

   **Exhaust : 43.975 - 44.165 mm (1.7313 - 1.7388 in)**

   **Cam wear limit**

   **: 0.2 mm (0.008 in)**

2. If wear is beyond the limit, replace camshaft.

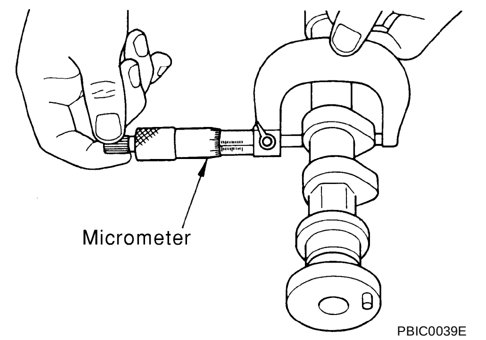

PBIC0039E

### Camshaft Journal Oil Clearance

#### CAMSHAFT JOURNAL DIAMETER

Measure the outer diameter of camshaft journal with a micrometer.

**Standard:**

**No. 1 : 27.935 - 27.955 mm (1.0998 - 1.1006 in)**

**No. 2, 3, 4, 5 : 23.435 - 23.455 mm (0.9226 - 0.9234 in)**

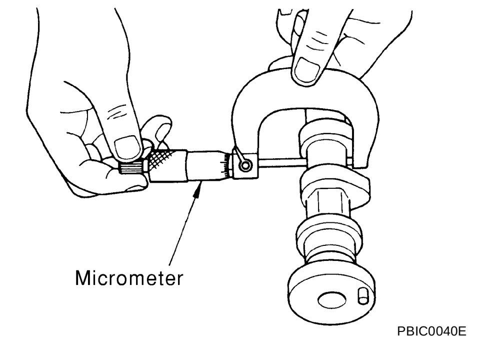

PBIC0040E

#### CAMSHAFT BRACKET INNER DIAMETER

- Tighten camshaft bracket bolts with the specified torque. Refer to EM-42, "INSTALLATION" for the tightening procedure.
- Measure inner diameter “A” of camshaft bracket with a bore gauge.

**Standard:**

**No. 1 : 28.000 - 28.021 mm (1.1024 - 1.1032 in)**

**No. 2, 3, 4, 5 : 23.500 - 23.521 mm (0.9252 - 0.9260 in)**

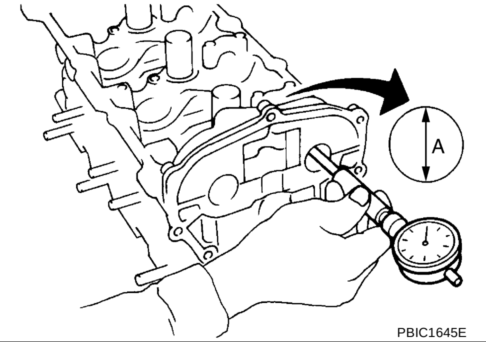

PBIC1645E

### CAMSHAFT JOURNAL OIL CLEARANCE

- (Oil clearance) = (Camshaft bracket inner diameter) – (Camshaft journal diameter)

  **Standard : 0.045 - 0.086 mm (0.0018 - 0.0034 in)**

- If out of the standard, replace either or both camshaft and cylinder head.

  **NOTE:**
  Camshaft brackets cannot be replaced as single parts, because they are machined together with cylinder head. Replace whole cylinder head assembly.

## Camshaft End Play

1. Install camshaft in cylinder head. Refer to EM-42, "INSTALLATION" for tightening procedure.
2. Install a dial indicator in thrust direction on front end of camshaft. Measure the camshaft end play on the dial indicator when camshaft is moved forward/backward (in direction to axis).

   **Standard : 0.115 - 0.188 mm (0.0045 - 0.0074 in)**

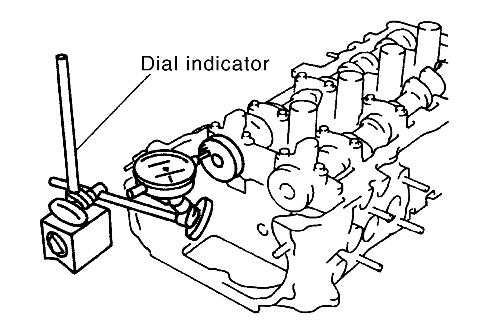

PBIC2446E

- Measure the following parts if out of the standard.
  - Dimension “A” for camshaft No. 1 journal

    **Standard : 25.800 - 25.848 mm (1.0157 - 1.0176 in)**

  - Dimension “B” for cylinder head No. 1 journal bearing

    **Standard : 25.660 - 25.685 mm (1.0102 - 1.0112 in)**

- Refer to the standards above, and then replace camshaft and/or cylinder head.

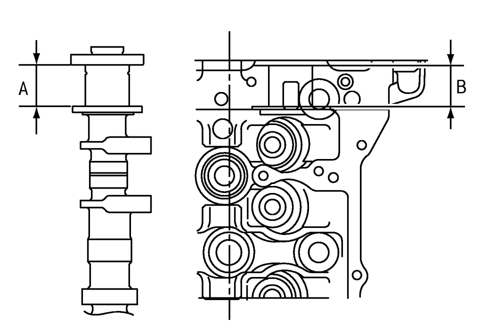

KBIA2426J

## Camshaft Sprocket Runout

1. Put V-block on precise flat table, and support No. 2 and 5 journals of camshaft.

   **CAUTION:**
   **Do not support No. 1 journal (on the side of camshaft sprocket) because it has a different diameter from the other four locations.**

2. Measure the camshaft sprocket runout with a dial indicator. (Total indicator reading)

   **Limit : 0.15 mm (0.0059 in)**

- If it exceeds the limit, replace camshaft sprocket.

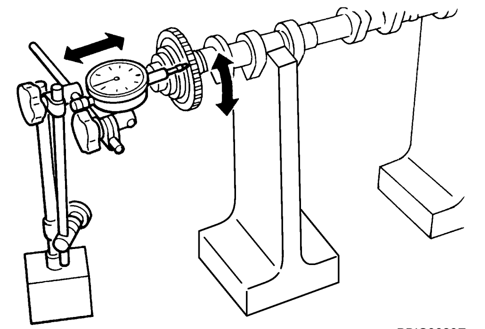
PBIC0930E

## Valve Lifter

Check if surface of valve lifter has any wear or cracks.

- If anything above is found, replace valve lifter. Refer to EM-46, "Valve Clearance" .

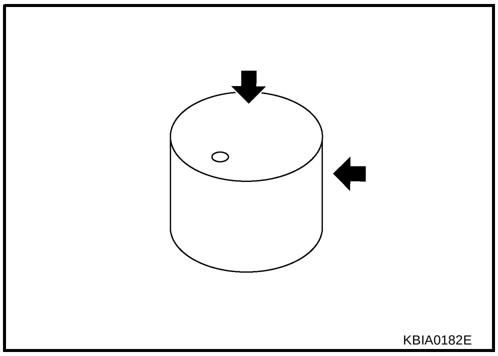


## Valve Lifter Clearance

### VALVE LIFTER OUTER DIAMETER

- Measure the outer diameter of valve lifter with a micrometer.

**Standard : 33.965 - 33.980 mm (1.3372 - 1.3378 in)**

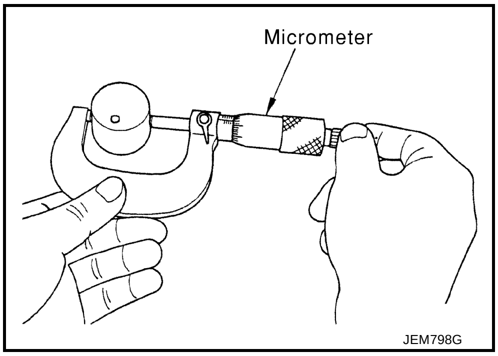


### VALVE LIFTER HOLE DIAMETER

Measure the diameter of valve lifter hole of cylinder head with an inside micrometer.

**Standard : 34.000 - 34.021 mm (1.3386 - 1.3394 in)**

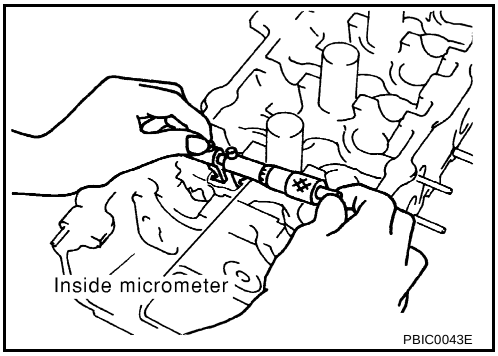


### VALVE LIFTER CLEARANCE

- (Valve lifter clearance) = (Valve lifter hole diameter) – (Valve lifter outer diameter)

**Standard : 0.020 - 0.056 mm (0.0008 - 0.0022 in)**

- If out of the standard, referring to the each standard of valve lifter outer diameter and valve lifter hole diameter, replace either or both valve lifter and cylinder head.

### INSTALLATION

1. Install valve lifters.
   - Install them in the original positions.

2. Install camshafts.
   - Distinction between intake and exhaust camshafts is performed with the different shapes of rear end.

     **Intake : Signal plate shape for camshaft position sensor (PHASE)**

     **Exhaust : Cone end shape**

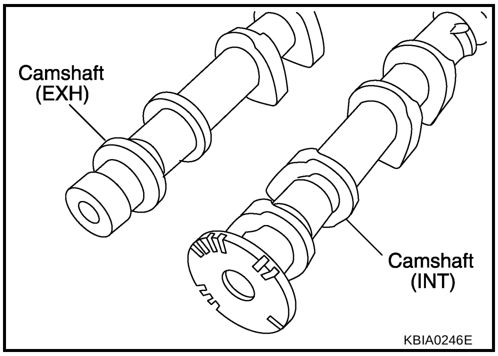


   - Install camshafts so that camshaft dowel pins on the front side are positioned as shown in the figure.

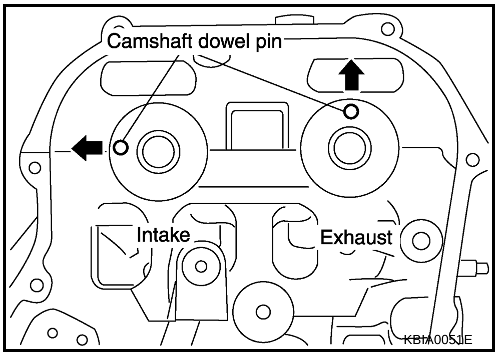


3. Install camshaft brackets with the following procedure:

a. Remove foreign material completely from camshaft bracket backside and from cylinder head installation face.

b. Install camshaft brackets (No. 2 to 5) aligning the identification marks on upper surface as shown in the figure.

   **NOTE:**
   Install so that identification mark can be correctly read when viewed from the exhaust side.

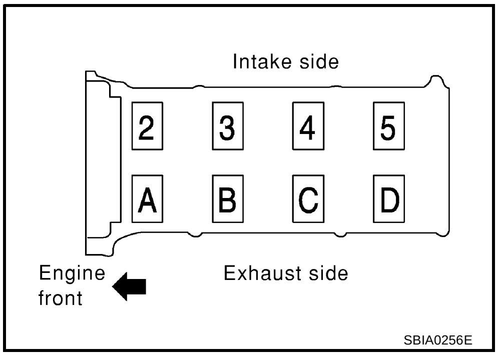


c. Install camshaft bracket (No. 1) with the following procedure:

i. Apply liquid gasket to camshaft bracket (No. 1) as shown in the figure.
   **Use Genuine RTV Silicone Sealant or equivalent. Refer to GI-48, "RECOMMENDED CHEMICAL PRODUCTS AND SEALANTS" .**

   **CAUTION:**
   **After installation, be sure to wipe off any excessive liquid gasket leaking from part "A".**

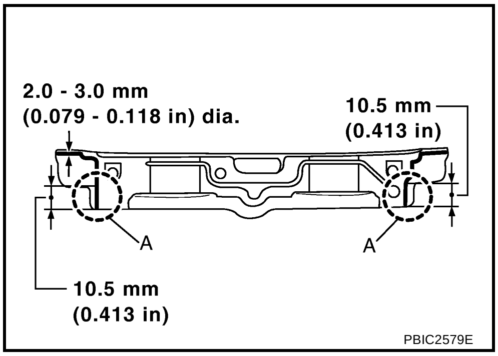

ii. Apply liquid gasket to camshaft bracket (No. 1) contact surface on the front cover backside.
**Use Genuine RTV Silicone Sealant or equivalent. Refer to** GI-48, "RECOMMENDED CHEMICAL PRODUCTS AND SEALANTS" **.**

- Apply liquid gasket to the outside of bolt hole on front cover.

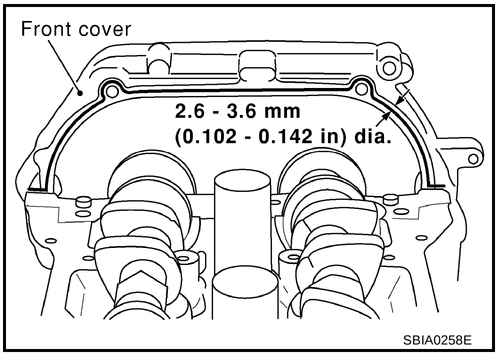


iii. Locate camshaft bracket (No. 1) near installation position, and install it without disturbing the liquid gasket applied to the surfaces.

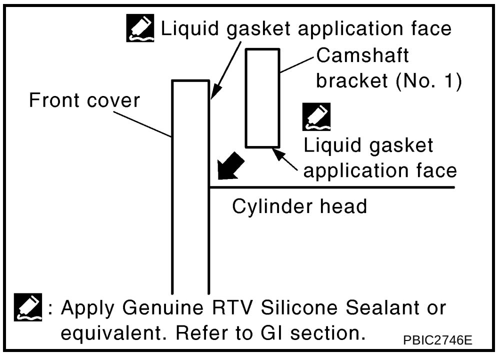


4. Tighten mounting bolts of camshaft brackets in the following steps, in numerical order as shown in the figure.

a. Tighten No. 9 to 11 in numerical order.

: 2.0 N·m (0.2 kg-m, 1 ft-lb)

b. Tighten No. 1 to 8 in numerical order.

: 2.0 N·m (0.2 kg-m, 1 ft-lb)

c. Tighten all bolts in numerical order.

: 5.9 N·m (0.6 kg-m, 4 ft-lb)

d. Tighten all bolts in numerical order.

: 10.4 N·m (1.1 kg-m, 8 ft-lb)

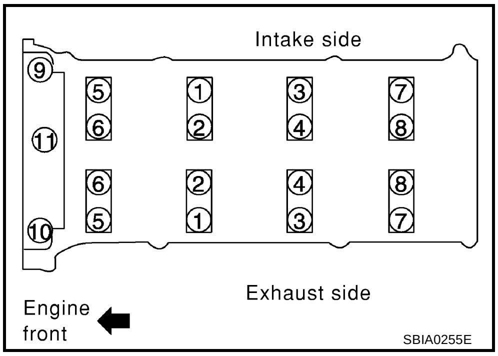


**CAUTION:**
**After tightening mounting bolts of camshaft brackets, be sure to wipe off excessive liquid gasket from the parts listed below.**

- Mating surface of rocker cover
- Mating surface of front cover (When installed without front cover)

5. Install camshaft position sensor (PHASE).
6. Install camshaft sprockets.
   - Install them by aligning the mating marks on each camshaft sprocket with the paint marks on the timing chain link plates during removal.

   **CAUTION:**
   - **Aligned mating marks could slip. Therefore, after matching them, hold the timing chain in place by hand.**
   - **Before and after installing chain tensioner, make sure again that mating marks have not slipped.**

   **NOTE:**
   Before installation of chain tensioner, it is possible to re-match the marks on timing chain with the ones on each sprocket.

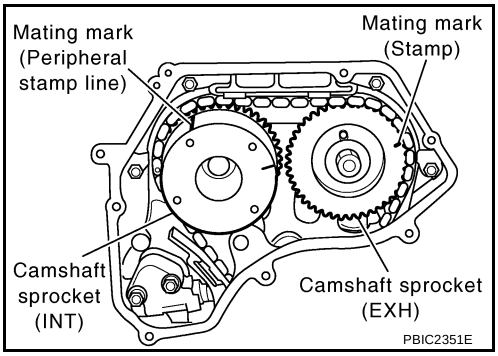


7. Install chain tensioner.

**CAUTION:**

**After installation, pull the stopper pin off completely, and make sure that chain tensioner plunger is released.**

8. Install chain guide.
9. Install intake valve timing control cover with the following procedure:

a. Install oil rings to the camshaft sprocket (INT) insertion points on backside of intake valve timing control cover.

b. Install O-ring to front cover.

c. Apply liquid gasket with the tube presser [SST: WS39930000 ( — )] to intake valve timing control cover as shown in the figure.
**Use Genuine RTV Silicone Sealant or equivalent. Refer to GI-48, "RECOMMENDED CHEMICAL PRODUCTS AND SEALANTS" .**

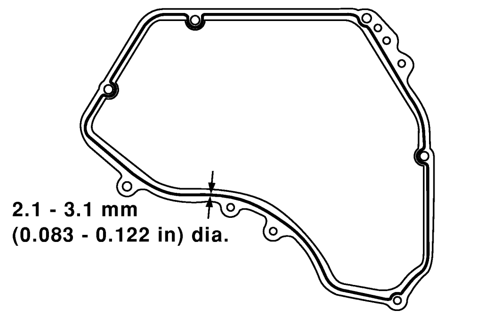

SBIA0260E

d. Tighten mounting bolts in numerical order as shown in the figure.

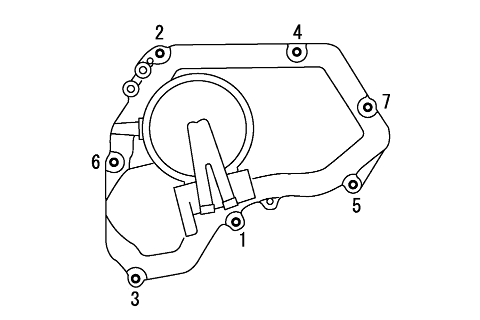

KBIA0085E

e. Install intake valve timing control solenoid valve to intake valve timing control cover if removed.

f. Connect ground cables, and install harness clip.

10. Check and adjust valve clearance. Refer to EM-46, "Valve Clearance" .
11. Install in the reverse order of removal after this step.

**NOTE:**

If hydraulic pressure inside timing chain tensioner drops after removal/installation, slack in the guide may generate a pounding noise during and just after the engine start. However, this is normal. Noise will stop after hydraulic pressure rises.

## INSPECTION AFTER INSTALLATION

### Inspection of Camshaft Sprocket (INT) Oil Groove

**CAUTION:**

- **Perform this inspection only when DTC P0011 is detected in self-diagnostic results of CONSULT-II and it is directed according to inspection procedure of EC section. Refer to EC-127, "SELF-DIAG RESULTS MODE" .**
- **Check when the engine is cold so as to prevent burns from any splashing engine oil.**

1. Check the engine oil level. Refer to LU-6, "ENGINE OIL" .
2. Perform the following procedure so as to prevent the engine from being unintentionally started while checking.

a. Release fuel pressure. Refer to EC-90, "FUEL PRESSURE RELEASE" .

b. Disconnect ignition coil and injector harness connectors.

3. Remove intake valve timing control solenoid valve. Refer to EM-37, "CAMSHAFT" .

4. Crank the engine, and then make sure that engine oil comes out from intake valve timing control cover oil hole. End crank after checking.

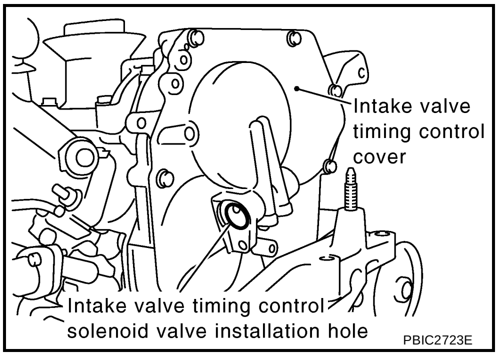


**WARNING:**
**Be careful not to touch rotating parts (drive belt, idler pulley, and crankshaft pulley, etc.).**

**CAUTION:**
**Engine oil may squirt from intake valve timing control solenoid valve installation hole during cranking. Use a shop cloth to prevent the engine components and the vehicle. Do not allow engine oil to get on rubber components such as drive belt or engine mount insulators. Immediately wipe off any splashed engine oil.**

- Clean oil groove between oil strainer and intake valve timing control solenoid valve if engine oil does not come out from intake valve timing control cover oil hole. Refer to LU-4, "LUBRICATION SYSTEM" .

5. Remove components between intake valve timing control solenoid valve and camshaft sprocket (INT), and then check each oil groove for clogging.
   - Clean oil groove if necessary. Refer to LU-4, "LUBRICATION SYSTEM" .
6. After inspection, install removed parts.

## Valve Clearance

ABS00CJD

### INSPECTION

Perform inspection as follows after removal, installation or replacement of camshaft or valve-related parts, or if there is unusual engine conditions regarding valve clearance.

1. Remove rocker cover. Refer to EM-35, "ROCKER COVER" .
2. Open splash guard on RH undercover.
3. Measure the valve clearance with the following procedure:

a. Set No. 1 cylinder at TDC of its compression stroke.
   - Rotate crankshaft pulley clockwise and align TDC mark to timing indicator on front cover.

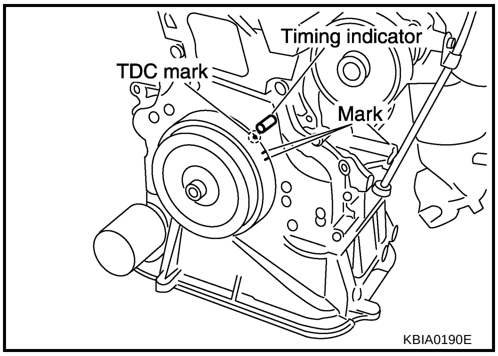


   - At the same time, make sure that both intake and exhaust cam noses of No. 1 cylinder face outside as shown in the figure.
   - If they do not face outside, rotate crankshaft pulley once more (360 degrees) and align as shown in the figure.

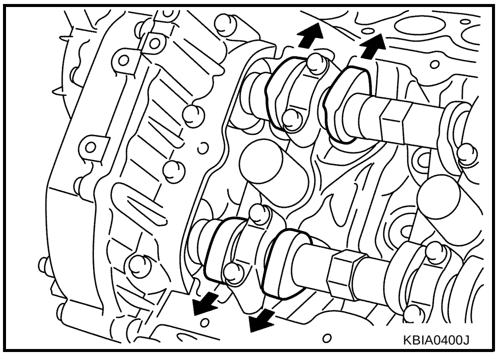

A
EM
C
D
E
F
G
H
I
J
K
L
M

b. Use a feeler gauge, measure the clearance between valve lifter and camshaft.

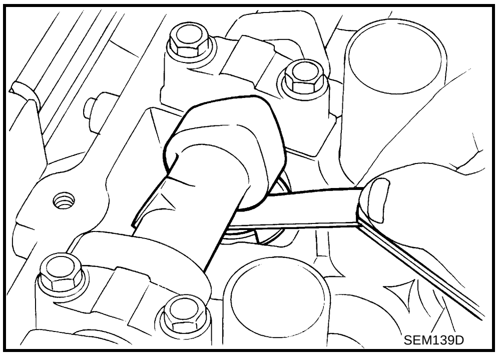
SEM139D

**Valve clearance:**

Unit: mm (in)

| | Cold | Hot * (reference data) |
|---|---|---|
| Intake | 0.24 - 0.32 (0.009 - 0.013) | 0.304 - 0.416 (0.012 - 0.016) |
| Exhaust | 0.26 - 0.34 (0.010 - 0.013) | 0.308 - 0.432 (0.012 - 0.017) |

*:Approximately 80°C (176°F)

- By referring to the figure, measure the valve clearances at locations marked “×” as shown in the table below (locations indicated with black arrow in the figure) with a feeler gauge.
- No. 1 cylinder compression TDC

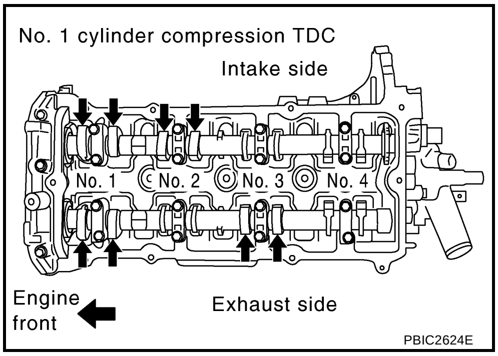

PBIC2624E

| Measuring position | | No. 1 CYL. | No. 2 CYL. | No. 3 CYL. | No. 4 CYL. |
|---|---|---|---|---|---|
| No. 1 cylinder at compression TDC | INT | × | × | | |
| | EXH | × | | × | |

c. Rotate crankshaft pulley one revolution (360 degrees) and align TDC mark to timing indicator on front cover.

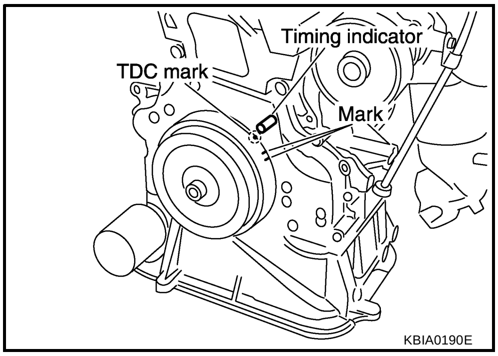

KBIA0190E

- By referring to the figure, measure the valve clearance at locations marked “×” as shown in the table below (locations indicated with black arrow in the figure) with a feeler gauge.
- No. 4 cylinder compression TDC

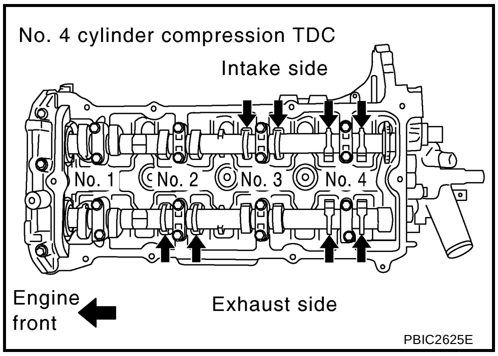

PBIC2625E

| Measuring position | | No. 1 CYL. | No. 2 CYL. | No. 3 CYL. | No. 4 CYL. |
|---|---|---|---|---|---|
| No. 4 cylinder at compression TDC | INT | | | × | × |
| | EXH | | × | | × |

4. If out of standard, perform adjustment. Refer to EM-47, "ADJUSTMENT" .

## ADJUSTMENT

- Perform adjustment depending on selected head thickness of valve lifter.

1. Remove camshaft. Refer to EM-37, "REMOVAL" .
2. Remove valve lifters at the locations that are out of the standard.
3. Measure the center thickness of the removed valve lifters with a micrometer.

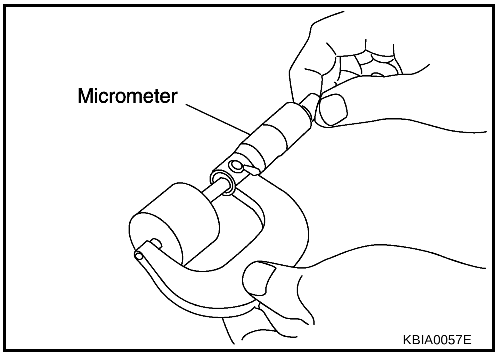


4. Use the equation below to calculate valve lifter thickness for replacement.

**Valve lifter thickness calculation: $t = t_1 + (C_1 - C_2)$**

**$t$ = Valve lifter thickness to be replaced**

**$t_1$ = Removed valve lifter thickness**

**$C_1$ = Measured valve clearance**

**$C_2$ = Standard valve clearance:**

| | |
|---|---|
| **Intake** | **: 0.28 mm (0.011 in)** |
| **Exhaust** | **: 0.30 mm (0.012 in)** |

- Thickness of new valve lifter can be identified by stamp mark on the reverse side (inside the cylinder).
  Stamp mark “696” indicates 6.96 mm (0.2740 in) in thickness.

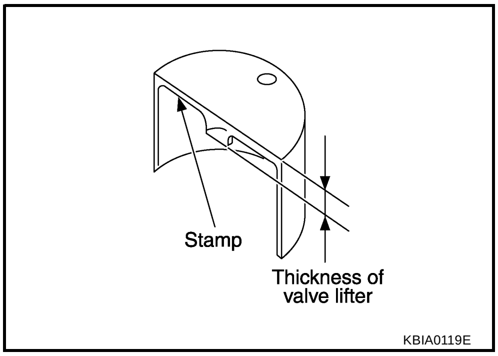


**NOTE:**
Available thickness of valve lifter: 26 sizes range 6.96 to 7.46 mm (0.2740 to 0.2937 in) in steps of 0.02 mm (0.0008 in) (when manufactured at factory). Refer to EM-110, "Available Valve Lifter" .

5. Install the selected valve lifter.
6. Install camshaft. Refer to EM-42, "INSTALLATION" .
7. Manually rotate crankshaft pulley a few rotations.
8. Make sure that valve clearances for cold engine are within specifications by referring to the specified values. Refer to EM-46, "INSPECTION" .
9. Install all removed parts in the reverse order of removal. Refer to EM-42, "INSTALLATION" .
10. Warm up the engine, and check for unusual noise and vibration.

# TIMING CHAIN

PFP:13028

## Removal and Installation

ABS00E9J

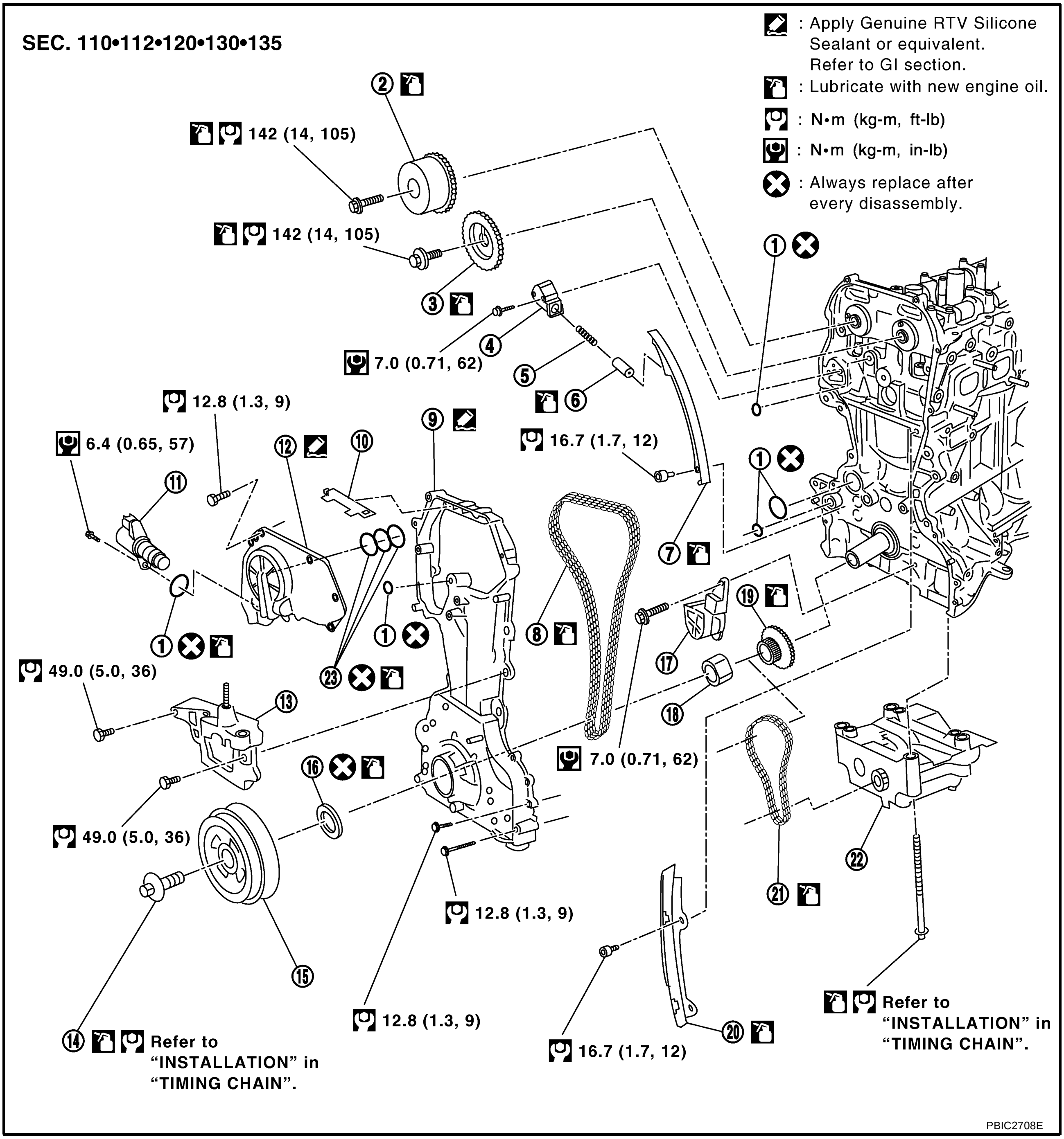


| | | | | | |
|---|---|---|---|---|---|
| 1. | O-ring | 2. | Camshaft sprocket (INT) | 3. | Camshaft sprocket (EXH) |
| 4. | Chain tensioner | 5. | Spring | 6. | Chain tensioner plunger |
| 7. | Timing chain slack guide | 8. | Timing chain | 9. | Front cover |
| 10. | Chain guide | 11. | Intake valve timing control solenoid valve | 12. | Intake valve timing control cover |
| 13. | RH engine mounting bracket | 14. | Crankshaft pulley bolt | 15. | Crankshaft pulley |
| 16. | Front oil seal | 17. | Balancer unit timing chain tensioner | 18. | Oil pump drive spacer |
| 19. | Crankshaft sprocket | 20. | Timing chain tension guide | 21. | Balancer unit timing chain |
| 22. | Balancer unit | 23. | Oil ring | | |

### REMOVAL

1. Remove the following parts.

- Hood assembly; Refer to BL-12, "HOOD" .
- RH and LH undercovers
- Engine cover; Refer to EM-16, "INTAKE MANIFOLD" .
- PCV hose; Refer to EM-16, "INTAKE MANIFOLD" .
- Ignition coil; Refer to EM-27, "IGNITION COIL" .
- Rocker cover; Refer to EM-35, "ROCKER COVER" .
- Engine coolant reservoir tank; Refer to CO-11, "RADIATOR" .
- Drive belt; Refer to EM-11, "DRIVE BELTS" .
- Alternator; Refer to SC-20, "CHARGING SYSTEM" .
- Drive belt auto-tensioner; Refer to EM-12, "Removal and Installation of Drive Belt Auto-Tensioner" .
- Exhaust front tube; Refer to EX-2, "EXHAUST SYSTEM" .

2. Drain engine oil. Refer to LU-7, "Changing Engine Oil" .

   **CAUTION:**

   **Perform this step when the engine is cold.**
3. Remove A/C compressor with piping connected. Temporarily secure A/C compressor to the vehicle side with a rope to avoid putting a load on them. Refer to ATC-122, "Removal and Installation of Compressor" (Automatic A/C models) or MTC-82, "Removal and Installation of Compressor" (Manual A/C models).
4. Remove bracket mounting bolts for fixing A/C piping near right strut housing and exhaust manifold cover. Doing so simplifies moving.
5. Remove power steering oil pump with piping connected, and secure it to the vehicle side temporarily. Refer to PS-33, "HYDRAULIC LINE" .
6. Remove power steering reservoir tank from bracket to move power steering piping. Refer to PS-33, "HYDRAULIC LINE" .

   **CAUTION:**

   **To avoid power steering fluid leakage, temporarily fix power steering reservoir tank vertically.**
7. Install engine slingers into front-left of cylinder head and rear-right of cylinder head.
   - Use alternator bracket mounting bolt holes for the front side.

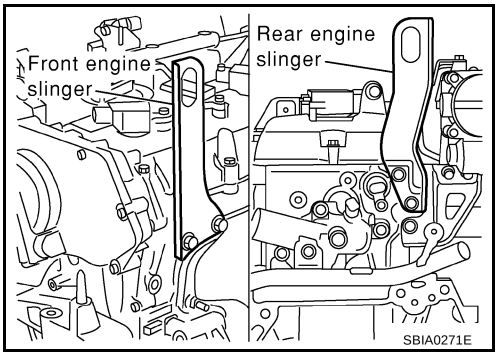


**Slinger bolts:**

**Front**

**: 57.9 N·m (5.9 kg-m, 43 ft-lb)**

**Rear**

**: 28.0 N·m (2.9 kg-m, 21 ft-lb)**

8. Lift with a hoist, and support the engine posture.
9. Remove engine mounting related parts below with power tool. Refer to EM-73, "Removal and Installation (2WD Models)" (2WD models) or EM-77, "Removal and Installation (AWD Models)" (AWD models).
   - RH engine mounting insulator
   - Center member
   - Rear engine mounting bracket (2WD models)
10. Remove oil pan (upper and lower) with power tool, and oil strainer. Refer to EM-22, "OIL PAN AND OIL STRAINER" .
11. Remove intake valve timing control cover with the following procedure:

a. Disconnect intake valve timing control solenoid valve harness connector.

b. Disconnect ground cables and remove harness clip.

c. Remove intake valve timing control solenoid valve, if necessary.

d. Loosen bolts in reverse order as shown in the figure.

e. Use the seal cutter [SST: KV10111100 (J37228)] or suitable tool to cut liquid gasket for removal.

**CAUTION:**

**Be careful not to damage the mating surfaces.**

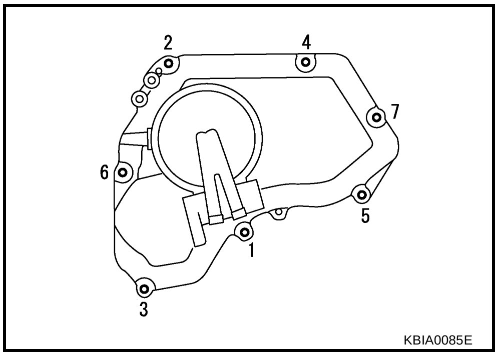


12. Pull chain guide between camshaft sprockets out through front cover.
13. Set No. 1 cylinder at TDC on its compression stroke with the following procedure:

a. Rotate crankshaft pulley clockwise and align TDC mark to timing indicator on front cover.

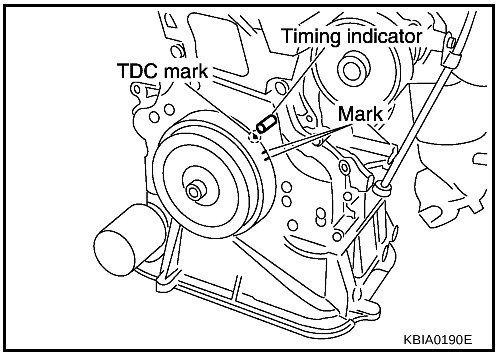


b. At the same time, make sure that the mating marks on camshaft sprockets are located as shown in the figure.
   - If not, rotate crankshaft pulley once more (360 degrees) to align mating marks to the positions in the figure.

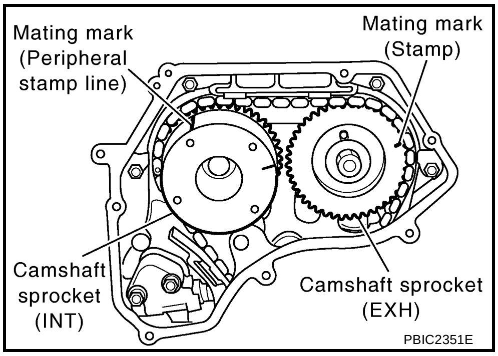


14. Remove crankshaft pulley with the following procedure:

a. Fix crankshaft pulley with a pulley holder (commercial service tool), loosen crankshaft pulley bolt, and locate bolt seating surface at 10 mm (0.39 in) from its original position.

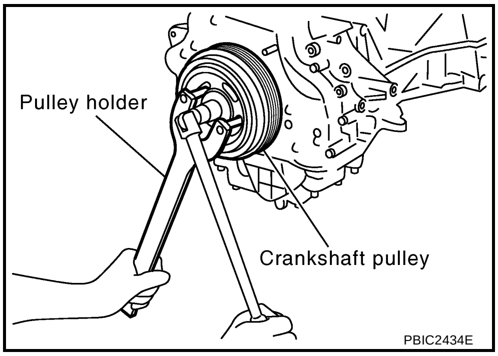

b. Attach a pulley puller (commercial service tool) in the M 6 thread hole on crankshaft pulley, and remove crankshaft pulley.

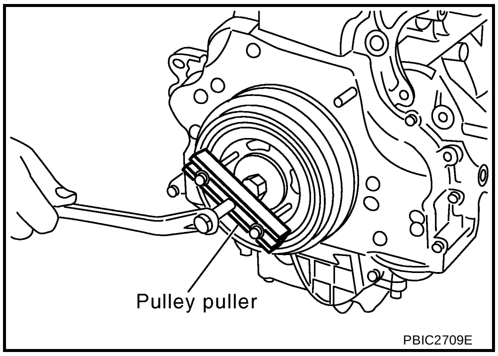


15. Remove front cover and RH engine mounting bracket with the following procedure:

a. Loosen mounting bolts in reverse order as shown in the figure, and remove RH engine mounting bracket.

b. Use the seal cutter [SST: KV10111100 (J37228)] or suitable tool to cut liquid gasket for removing front cover.

   **CAUTION:**
   **Be careful not to damage the mating surfaces.**

c. Pull out downward front cover.

   **CAUTION:**
   **Do not let A/C and power steering pipings interfere with upper part of front cover.**

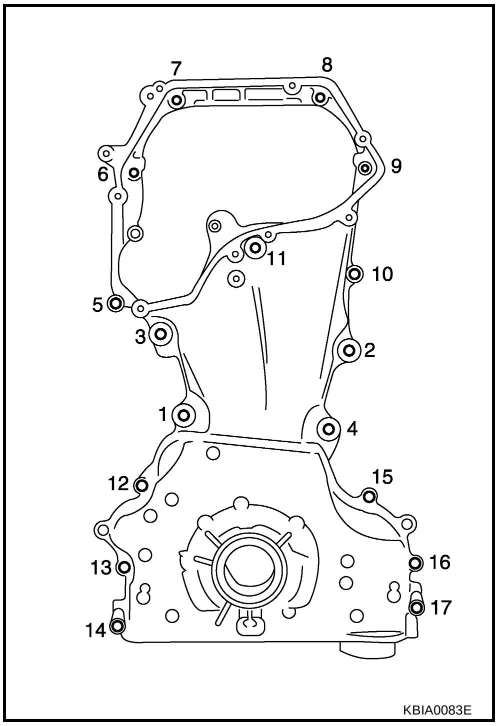


16. Remove front oil seal from front cover using suitable tool.

   **CAUTION:**
   **Be careful not to damage front cover.**

17. Remove timing chain with the following procedure:

a. Push in chain tensioner plunger. Insert a stopper pin into hole on chain tensioner body to secure chain tensioner plunger and remove chain tensioner.

   **NOTE:**
   Use approximately 0.5 mm (0.02 in) dia. hard metal pin as a stopper pin.

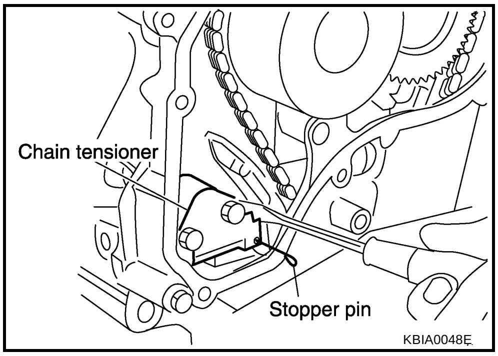


b. Remove timing chain.

   **CAUTION:**
   **Do not rotate crankshaft or camshaft while timing chain is removed. It causes interference between valve and piston.**

18. Remove camshaft sprockets. Refer to EM-37, "CAMSHAFT" .

19. Remove timing chain slack guide, timing chain tension guide and oil pump drive spacer.
20. Remove balancer unit timing chain tensioner with the following procedure:
    a. Lift lever up, and release ratchet claw for return proof.
    b. Push tensioner sleeve in, and hold it.
    c. Matching the hole on lever with the one on body, insert a stopper pin to secure tensioner sleeve.

       **NOTE:**
       Use approximately 1 mm (0.04 in) dia. hard metal pin as a stopper pin.
    d. Remove balancer unit timing chain tensioner.

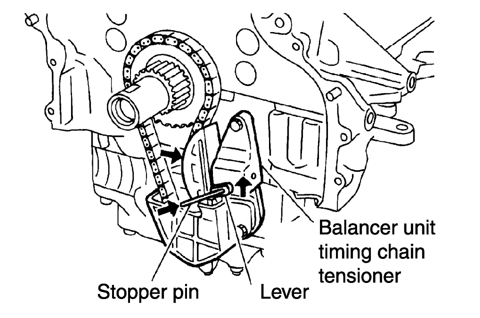

KBIA0121E

21. Remove balancer unit timing chain and crankshaft sprocket.
22. Loosen mounting bolts in reverse order as shown in the figure, and remove balancer unit.

    **CAUTION:**
    **Do not disassemble balancer unit.**

    **NOTE:**
    Use TORX socket (size E14).

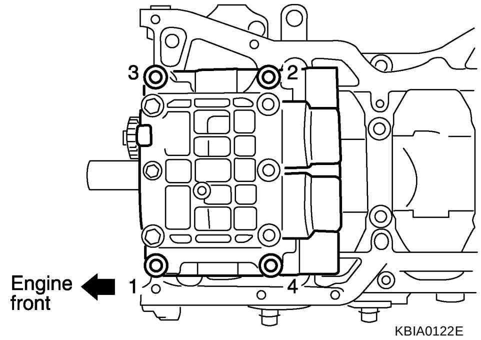

KBIA0122E

## INSPECTION AFTER REMOVAL

### Timing Chain

Check timing chain for cracks and any excessive wear at the roller links of timing chain. Replace timing chain if necessary.

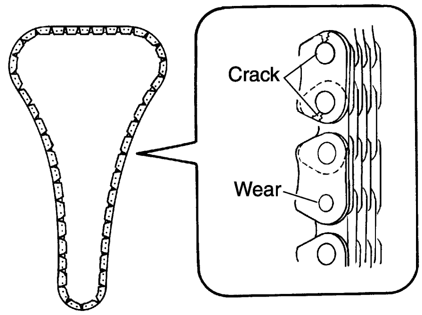

PBIC0282E

### Balancer Unit Mounting Bolt Outer Diameter

- Measure outer diameters ("d1", "d2") at two positions as shown in the figure.
- If reduction appears in "A" range, regard it as "d2".

  **Limit ("d1" – "d2") : 0.15 mm (0.0059 in)**

- If it exceeds the limit (large difference in dimensions), replace balancer unit mounting bolt with a new one.

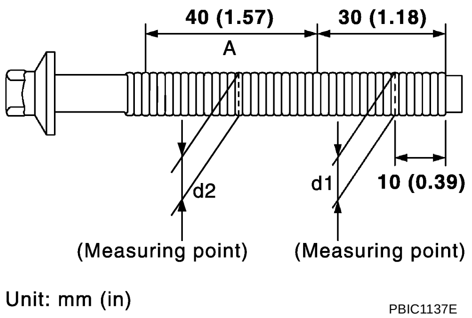

PBIC1137E

## INSTALLATION

**NOTE:**

The figure shows the relationship between the mating mark on each timing chain and that on the corresponding sprocket, with the components installed.

1. Make sure that crankshaft key points straight up.

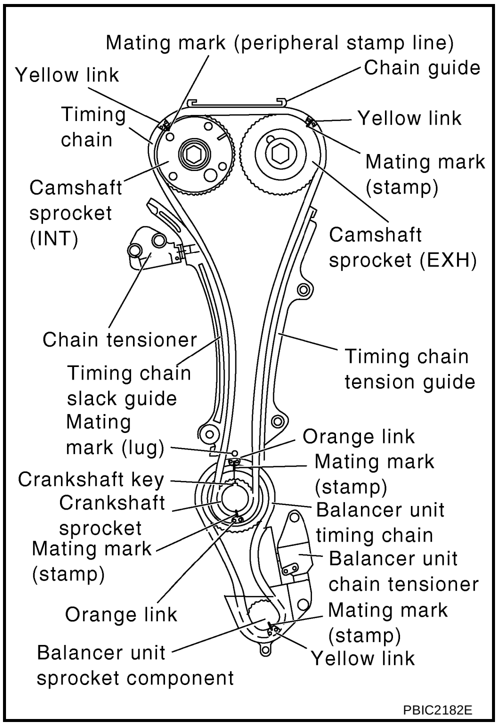


2. Tighten mounting bolts in numerical order as shown in the figure with the following procedure to install balancer unit.

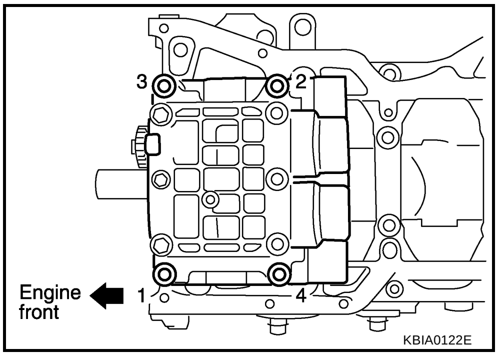


**CAUTION:**

**If mounting bolts are re-used, check their outer diameter before installation. Refer to** **EM-53, "Balancer Unit Mounting Bolt Outer Diameter"** **.**

a. Apply new engine oil to threads and seat surfaces of mounting bolts.

b. Tighten all bolts.

**: 48.1 N·m (4.9 kg-m, 35 ft-lb)**

c. Turn all bolts 90 degrees clockwise (angle tightening).

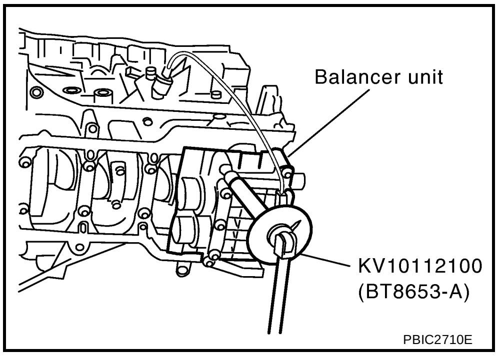


**CAUTION:**

**Check tightening angle with the angle wrench [SST] or a protractor. Do not make judgment by visual check alone.**

d. Completely loosen.

**: 0 N·m (0 kg-m, 0 ft-lb)**

**CAUTION:**

**In this step, loosen bolts in reverse order as shown in the figure.**

e. Tighten all bolts.

**: 48.1 N·m (4.9 kg-m, 35 ft-lb)**

f. Turn them another 90 degrees clockwise (angle tightening).

3. Install crankshaft sprocket and balancer unit timing chain.
   - Make sure that crankshaft sprocket is positioned with mating marks on cylinder block and crankshaft sprocket meeting at the top.
   - Install it by aligning mating marks on each sprocket and balancer unit timing chain.

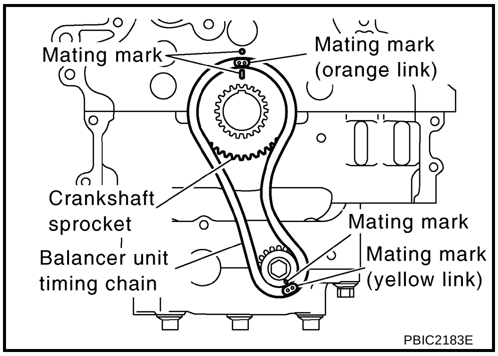


4. Install balancer unit timing chain tensioner.

   **NOTE:**
   Chain guide and tensioner move freely with staking pin as the axle. Therefore, bolt hole position of the three points could be changed during removal. If points change, temporarily fix the two mounting bolts on chain guide, and move tensioner to mate the bolt holes.
   - Be careful not to let mating marks of each sprocket and timing chain slip.
   - After installation, make sure the mating marks have not slipped, then remove stopper pin and release tensioner sleeve.

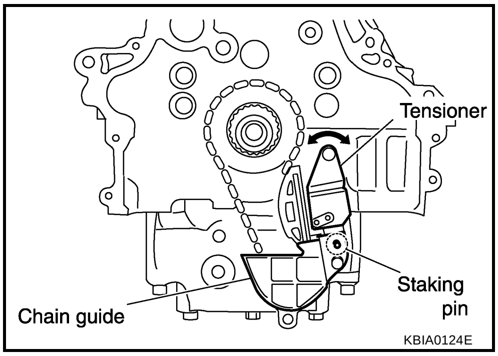


5. Install timing chain and related parts.
   - Install by aligning mating marks on each sprocket and timing chain.
   - Before and after installing chain tensioner, check again to make sure that mating marks have not slipped.
   - After installing chain tensioner, remove stopper pin, and make sure that tensioner moves freely.

   **CAUTION:**
   - **For the following note, after the mating marks are aligned, keep them aligned by holding them with a hand.**
   - **To avoid skipped teeth, do not rotate crankshaft and camshaft until front cover is installed.**

   **NOTE:**
   Before installing chain tensioner, it is possible to change the position of mating mark on timing chain for that on each sprocket for alignment.

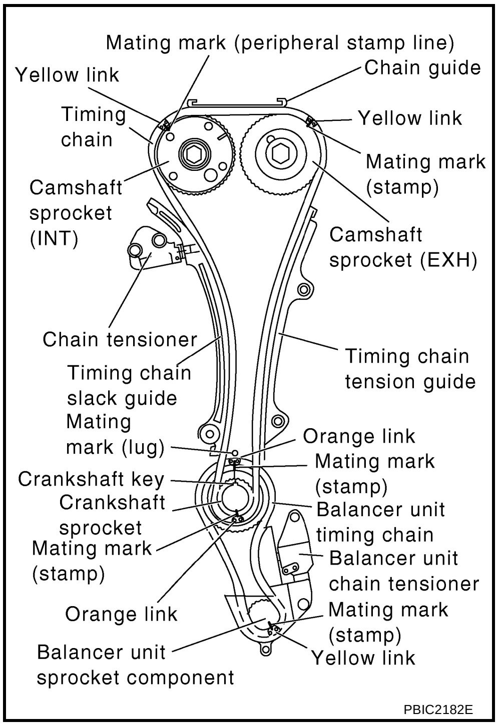


6. Install front oil seal to front cover. Refer to EM-60, "Removal and Installation of Front Oil Seal" .
7. Install front cover and RH engine mounting bracket with the following procedure:
a. Install O-rings to cylinder head and cylinder block.

b. Apply a continuous bead of liquid gasket with the tube presser [SST: WS39930000 ( — )] to front cover as shown in the figure.

**Use Genuine RTV Silicone Sealant or equivalent. Refer to** GI-48, "RECOMMENDED CHEMICAL PRODUCTS AND SEALANTS" **.**

**NOTE:**

Application instruction differs depending on the position.

| | | |
|---|---|---|
| **Detail of A** | **:** | **Cross over the start of the application and the end.** |
| **Detail of B** | **:** | **Apply liquid gasket outside of bolt holes. (For all bolt holes other than B, apply to the inside.)** |
| **Detail of C** | **:** | **Between here only, apply 4.5 - 5.5 mm (0.177 - 0.217 in) dia.** |

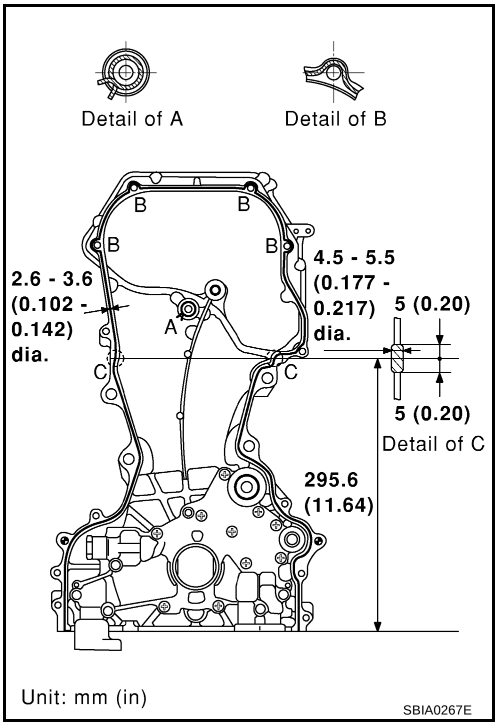


c. Make sure that mating marks of timing chain and each sprocket are still aligned. Then install front cover.

- When installing, align flat faces at oil pump drive spacer and oil pump inner rotor.

**CAUTION:**

- **Do not let A/C and power steering pipings interfere with upper part of front cover.**
- **Be careful not to damage front oil seal by interference with front end of crankshaft.**

d. Tighten mounting bolts in numerical order as shown in the figure.

- Refer to the following for locating M6 bolts.

| **Bolt length:** | | **Bolt position** |
|---|---|---|
| **45 mm (1.77 in)** | **:** | **5, 14, 17** |
| **20 mm (0.79 in)** | **:** | **Except the above (Except 1 to 4)** |

- At the same time, install RH engine mounting bracket. (Bolt positions 1 to 4 in the figure)

e. After all bolts are tightened, retighten them to the specified torque in numerical order as shown in the figure.

**CAUTION:**

**Be sure to wipe off any excessive liquid gasket leaking to surface for fitting oil pan (upper).**

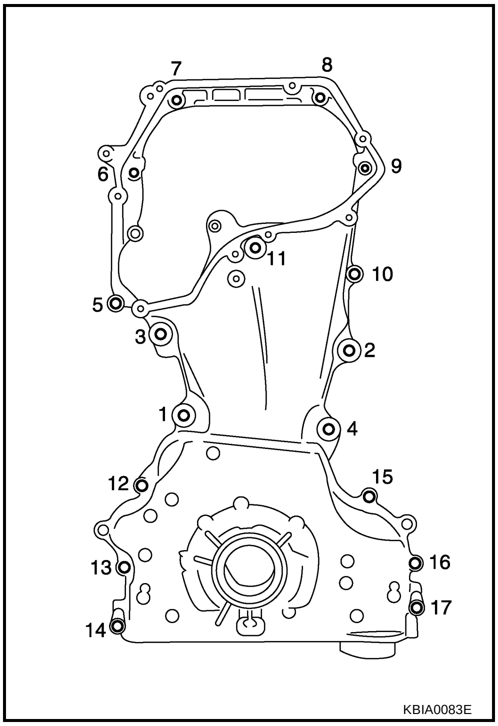


8. Install chain guide between camshaft sprockets.
9. Install intake valve timing control cover with the following procedure:

a. Install oil rings to the camshaft sprocket (INT) insertion points on backside of intake valve timing control cover.

b. Install O-ring to front cover.

c. Apply a continuous bead of liquid gasket with the tube presser [SST: WS39930000 ( — )] to intake valve timing control cover as shown in the figure.
**Use Genuine RTV Silicone Sealant or equivalent. Refer to** GI-48, "RECOMMENDED CHEMICAL PRODUCTS AND SEALANTS" **.**

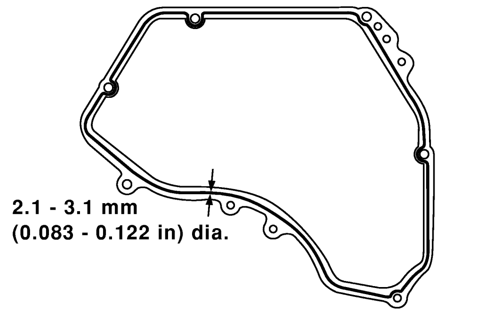

SBIA0260E

d. Tighten mounting bolts in numerical order as shown in the figure.

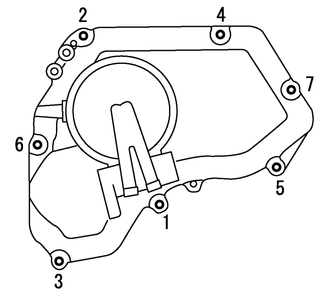

KBIA0085E

e. Install intake valve timing control solenoid valve to intake valve timing control cover if removed.
f. Connect ground cables, and install harness clip.
10. Insert crankshaft pulley by aligning with crankshaft key.
- When inserting crankshaft pulley with a plastic hammer, tap on its center portion (not circumference).

**CAUTION:**
**Install protecting front oil seal lip section from any damage.**

11. Tighten crankshaft pulley bolt with the following procedure.
- Secure crankshaft pulley with a pulley holder (commercial service tool), and tighten crankshaft pulley bolt.

a. Apply new engine oil to thread and seat surfaces of crankshaft pulley bolt.
b. Tighten crankshaft pulley bolt.

**: 42.1 N·m (4.3 kg-m, 31 ft-lb)**

c. Put a paint mark on crankshaft pulley, mating with any one of six easy to recognize angle marks on bolt flange.
d. Turn another 60 degrees clockwise (angle tightening).
- Check the tightening angle with movement of one angle mark.

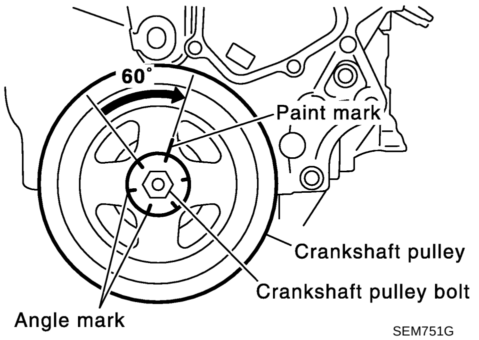

SEM751G

12. Install all removed parts in the reverse order of removal.

## INSPECTION AFTER INSTALLATION

- Before starting the engine, check the levels of engine coolant, engine oil and working fluid. If less than required quantity, fill to the specified level.
- Run the engine to check for unusual noise and vibration.

  **NOTE:**
  If hydraulic pressure inside timing chain tensioner drops after removal/installation, slack in the guide may generate a pounding noise during and just after the engine start. However, this is normal. Noise will stop after hydraulic pressure rises.
- Warm up the engine thoroughly to make sure there is no leakage of engine coolant, engine oil, working fluid and exhaust gases.
- Bleed air from passages in pipes and tubes of applicable lines, such as in cooling system.
- After cooling down the engine, again check levels of engine coolant, engine oil and working fluid. Adjust to the specified level, if necessary.

**Summary of the inspection items:**

| Item | Before starting engine | Engine running | After engine stopped |
|---|---|---|---|
| Engine coolant | Level | Leakage | Level |
| Engine oil | Level | Leakage | Level |
| Working fluid | Level | Leakage | Level |
| Exhaust gases | — | Leakage | — |

# OIL SEAL

PFP:12279

## Removal and Installation of Valve Oil Seal

ABS00CJE

### REMOVAL

1. Remove camshafts. Refer to EM-37, "CAMSHAFT" .
2. Remove valve lifters. Refer to EM-37, "CAMSHAFT" .
3. Rotate crankshaft, and set piston whose valve oil seal is to be removed to TDC. This will prevent valve from dropping into cylinder.

   **CAUTION:**
   **When rotating crankshaft, be careful to avoid scarring front cover with timing chain.**
4. Remove valve collet.
   - Compress valve spring with the valve spring compressor, the attachment and the adapter [SST]. Remove valve collet with a magnet hand.

   **CAUTION:**
   **When working, be careful not to damage valve lifter holes.**

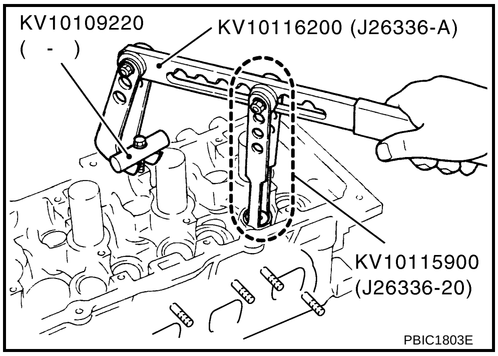


5. Remove valve spring retainer and valve spring.

   **CAUTION:**
   **Do not remove valve spring seat from valve spring.**
6. Remove valve oil seal with the valve oil seal puller [SST].

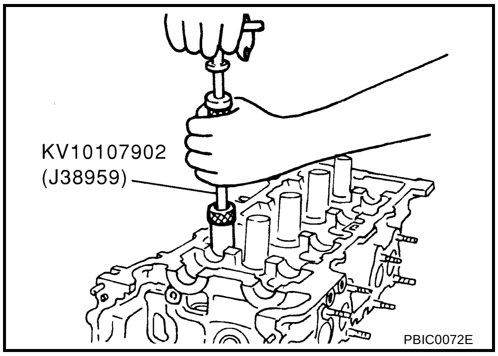


### INSTALLATION

1. Apply new engine oil to valve oil seal joint surface and seal lip.
2. Press in valve oil seal to the height “H” shown in the figure with the valve oil seal drift [SST].

   **Height “H” : 11.8 - 12.4 mm (0.465 - 0.488 in)**

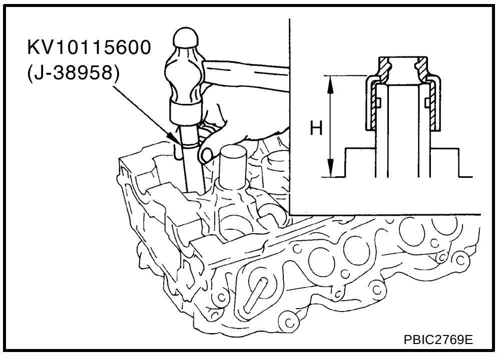


3. Install in the reverse order of removal after this step.

## Removal and Installation of Front Oil Seal

ABS00CJF

### REMOVAL

1. Remove the following parts.
   - RH undercover
   - RH front road wheel and tire
   - Drive belt; Refer to EM-11, "DRIVE BELTS" .
   - Crankshaft pulley; Refer to EM-49, "TIMING CHAIN" .
2. Remove front oil seal with a suitable tool.

   **CAUTION:**

   **Be careful not to damage front cover and crankshaft.**

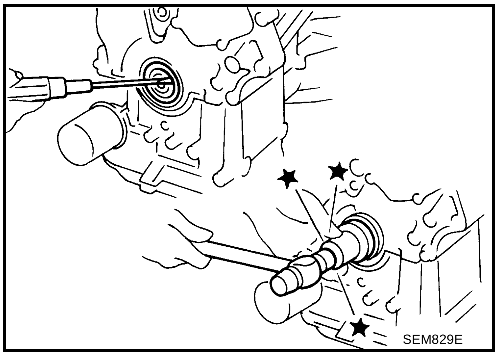


### INSTALLATION

1. Apply new engine oil to new front oil seal joint surface and seal lip.
2. Install front oil seal so that each seal lip is oriented as shown in the figure.

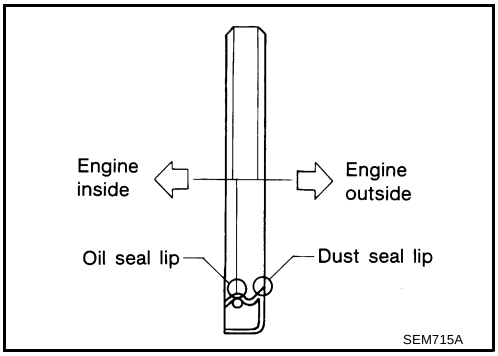


   - Press-fit front oil seal until it is flush with front end surface of front cover with a suitable tool.

     **CAUTION:**
     - **Be careful not to damage front cover and crankshaft.**
     - **Press-fit oil seal straight to avoid causing burrs or tilting.**

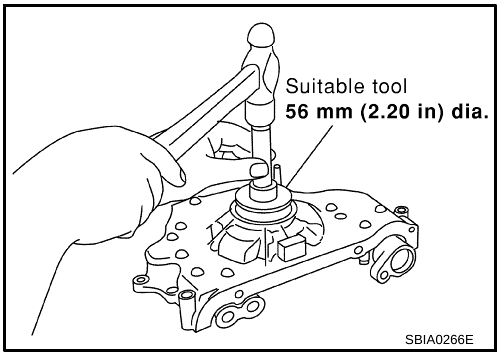


3. Install in the reverse order of removal after this step.

## Removal and Installation of Rear Oil Seal

ABS00CJG

### REMOVAL

1. Remove transaxle assembly. Refer to MT-17, "TRANSAXLE ASSEMBLY" (M/T models) or AT-269, "TRANSAXLE ASSEMBLY" (A/T models).
2. Remove clutch cover and clutch disk (M/T models). Refer to CL-14, "CLUTCH DISC, CLUTCH COVER AND FLYWHEEL" .
3. Remove drive plate (A/T models) or flywheel (M/T models) with power tool. Refer to EM-81, "CYLINDER BLOCK" .
4. Remove rear oil seal with a suitable tool.

   **CAUTION:**
   **Be careful not to damage crankshaft and cylinder block.**

### INSTALLATION

1. Apply new engine oil to new rear oil seal joint surface and seal lip.
2. Install rear oil seal so that each seal lip is oriented as shown in the figure.

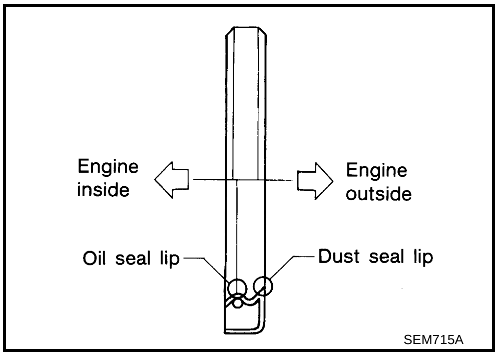

SEM715A

- Press in rear oil seal to the position as shown in the figure.

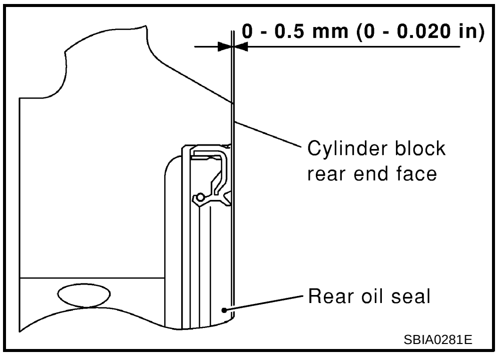

SBIA0281E

- Press-fit rear oil seal with a suitable drift [outside diameter 102 mm (4.02 in), inside diameter 86 mm (3.39 in)].

  **CAUTION:**
  - **Be careful not to damage crankshaft and cylinder block.**
  - **Press-fit oil seal straight to avoid causing burrs or tilting.**
  - **Do not touch grease applied onto oil seal lip.**

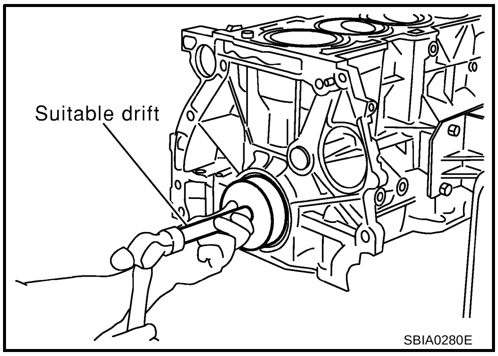

SBIA0280E

3. Install in the reverse order of removal after this step.

A
EM
C
D
E
F
G
H
I
J
K
L
M

# CYLINDER HEAD

PFP:11041

## On-Vehicle Service

ABS00CJH

### CHECKING COMPRESSION PRESSURE

1. Warm up engine thoroughly. Then, stop it.
2. Release fuel pressure. Refer to EC-90, "FUEL PRESSURE RELEASE" .
3. Disconnect fuel pump fuse to avoid fuel injection during measurement.

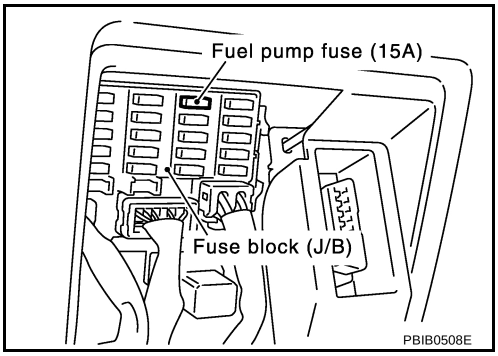

PBIB0508E

4. Remove engine cover. Refer to EM-16, "INTAKE MANIFOLD" .
5. Remove ignition coil and spark plug from each cylinder. Refer to EM-27, "IGNITION COIL" and EM-28, "SPARK PLUG (PLATINUM-TIPPED TYPE)" .
6. Connect an engine tachometer (not required in use of CONSULT-II).
7. Install a compression tester with an adapter (commercial service tool) onto spark plug hole.

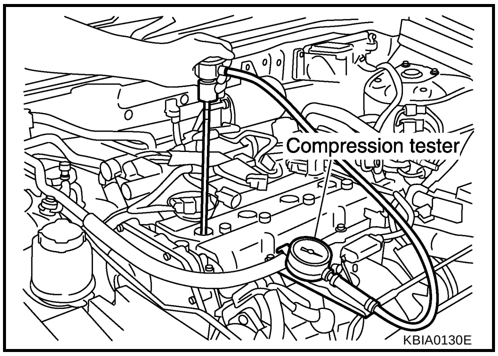

KBIA0130E

- Use the adapter whose picking up end inserted to spark plug hole is smaller than 20 mm (0.79 in) in diameter. Otherwise, it may be caught by cylinder head during removal.

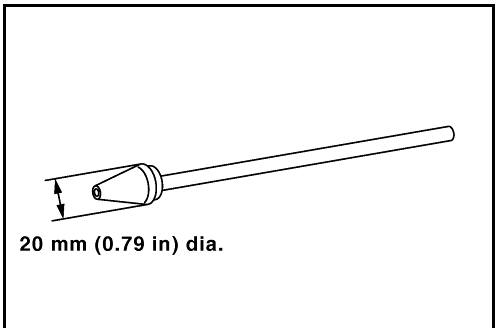

SBIA0533E

8. With accelerator pedal fully depressed, turn ignition switch to “START” for cranking. When the gauge pointer stabilizes, read the compression pressure and the engine rpm. Perform these steps to check each cylinder.

**Compression pressure:**

Unit: kPa (kg/cm$^2$ , psi) /rpm

| Standard | Minimum | Differential limit between cylinders |
|---|---|---|
| 1,250 (12.8, 181) / 250 | 1,060 (10.8, 154) / 250 | 100 (1.0, 14) / 250 |

**CAUTION:**
**Always use fully a changed battery to obtain the specified engine speed.**

- If the engine speed is out of the specified range, check battery liquid for proper gravity. Check engine speed again with normal battery gravity.
- If compression pressure is below minimum value, check valve clearances and parts associated with combustion chamber (Valve, valve seat, piston, piston ring, cylinder bore, cylinder head, cylinder head gasket). After the checking, measure the compression pressure again.
- If some cylinder has low compression pressure, pour small amount of engine oil into the spark plug hole of the cylinder to re-check it for compression.
  - If the added engine oil improves the compression, piston rings may be worn out or damaged. Check piston rings and replace if necessary.
  - If the compression pressure remains at low level despite the addition of engine oil, valves may be malfunctioning. Check valves for damage. Replace valve or valve seat accordingly.
- If two adjacent cylinders have respectively low compression pressure and their compression remains low even after the addition of engine oil, cylinder head gasket is leaking. In such a case, replace cylinder head gasket.

9. After inspection is completed, install removed parts.
10. Start the engine, and confirm that the engine runs smoothly.
11. Perform trouble diagnosis. If DTC appears, erase it. Refer to EC-94, "TROUBLE DIAGNOSIS" .

## Removal and Installation

ABS00CJI

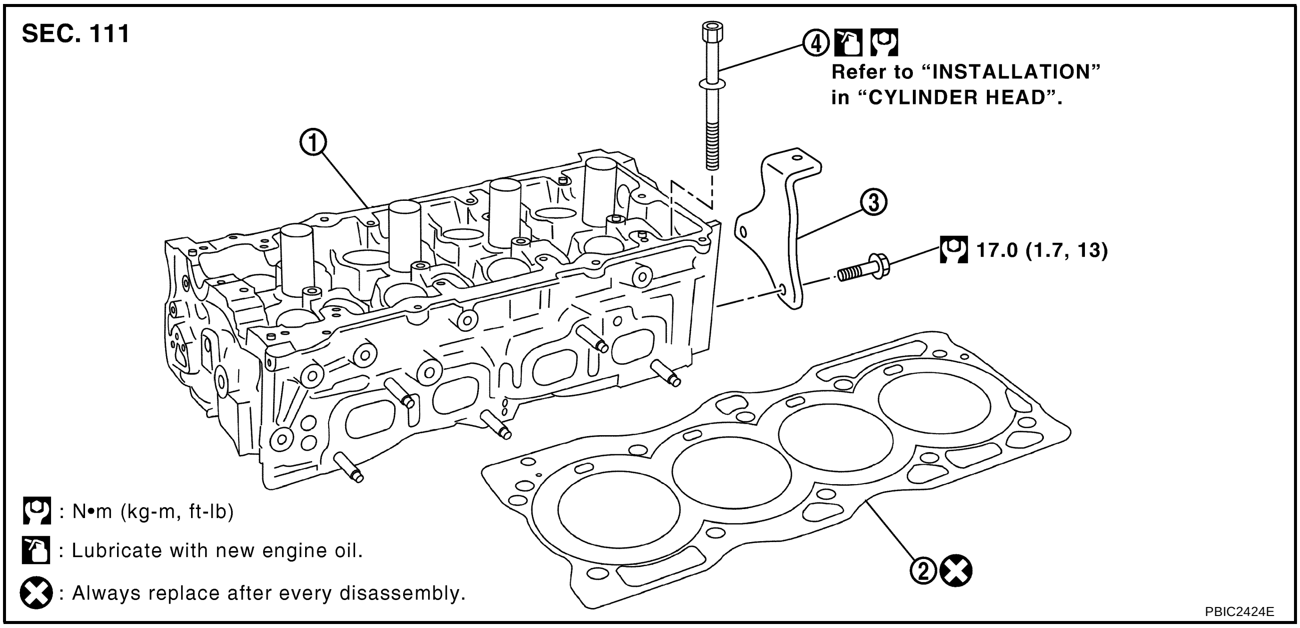


1. Cylinder head assembly
2. Cylinder head gasket
3. Engine cover bracket
4. Cylinder head bolt

### REMOVAL

1. Release fuel pressure. Refer to EC-90, "FUEL PRESSURE RELEASE" .
2. Drain engine coolant and engine oil. Refer to CO-8, "Changing Engine Coolant" and LU-7, "Changing Engine Oil" .

   **CAUTION:**
   - **Perform this step when the engine is cold.**
   - **Do not spill engine coolant and engine oil on drive belt.**
3. Remove the following components and related parts.
   - Exhaust manifold and three way catalyst assembly; Refer to EM-20, "EXHAUST MANIFOLD AND THREE WAY CATALYST" .
   - Intake manifold collector, intake manifold and fuel tube assembly; Refer to EM-16, "INTAKE MANIFOLD" .
   - Water control valve and housing (water outlet); Refer to CO-22, "THERMOSTAT AND WATER CONTROL VALVE" .

**NOTE:**
Can be removed and installed even when assembled with cylinder head.

4. Remove front cover and timing chain. Refer to EM-49, "TIMING CHAIN" .
5. Remove camshafts. Refer to EM-37, "CAMSHAFT" .
6. Securely support bottom of cylinder block with a jack or suitable tool, and release the hoist that was supporting it.
7. Remove cylinder head loosening bolts in reverse order as shown in the figure with power tool.

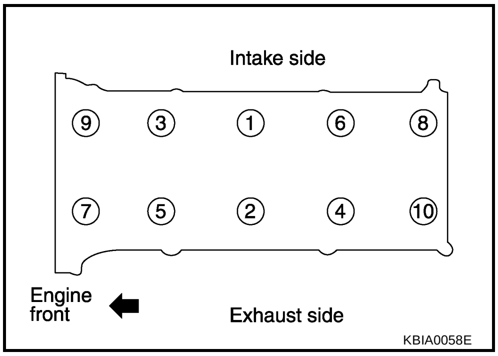


- Using the following tool, loosen cylinder head bolts.

**Bolt with washer**

**: Cylinder head bolt wrench (commercial service tool: J24239-01)**

**Flange bolt**

**: TORX socket (size E20)**

**NOTE:**
There are two types of cylinder head bolt because of parallel manufacture.

8. Remove cylinder head gasket.

## INSPECTION AFTER REMOVAL

### Cylinder Head Bolts Outer Diameter

- Cylinder head bolts are tightened by plastic zone tightening method. Whenever the size difference between “d1” and “d2” exceeds the limit, replace them with a new one.

**Limit (“d1” – “d2”): 0.23 mm (0.0091 in)**

- If reduction of outer diameter appears in a position other than “d2”, use it as “d2” point.

**NOTE:**
When replacing any cylinder head bolts, it is possible to use them with mixing flange bolt and bolt with washer.

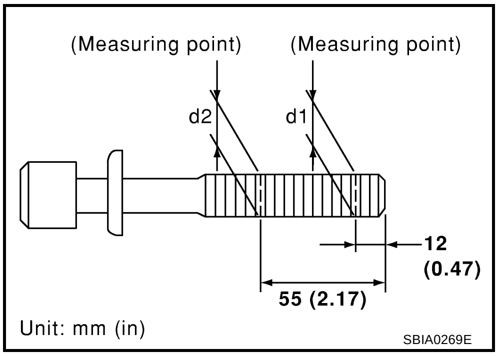


### Cylinder Head Distortion

**NOTE:**
When performing this inspection, cylinder block distortion should be also checking. Refer to EM-101, "CYLINDER BLOCK DISTORTION" .

1. Wipe off engine oil and remove water scale (like deposit), gasket, sealant, carbon, etc. with a scraper.

**CAUTION:**
**Use utmost care not to allow gasket debris to enter passages for engine oil or engine coolant.**

2. At each of several locations on bottom surface of cylinder head, measure the distortion in six directions.

**Limit : 0.1 mm (0.004 in)**

- If it exceeds the limit, replace cylinder head.

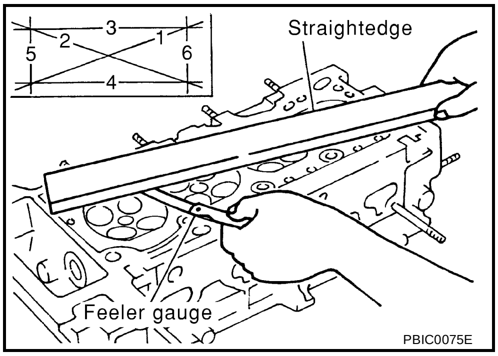

## INSTALLATION

1. Install new cylinder head gasket.
2. Tighten cylinder head bolts in numerical order as shown in the figure with the following procedure to install cylinder head.

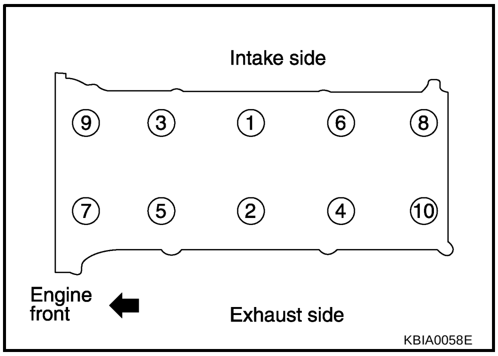


**CAUTION:**
**If cylinder head bolts are re-used, check their outer diameters before installation. Refer to EM-64, "Cylinder Head Bolts Outer Diameter" .**

a. Apply new engine oil to threads and seating surfaces of mounting bolts.
b. Tighten all bolts.

**: 50.0 N·m (5.1 kg-m, 37 ft-lb)**

c. Turn all bolts 60 degrees clockwise (angle tightening).

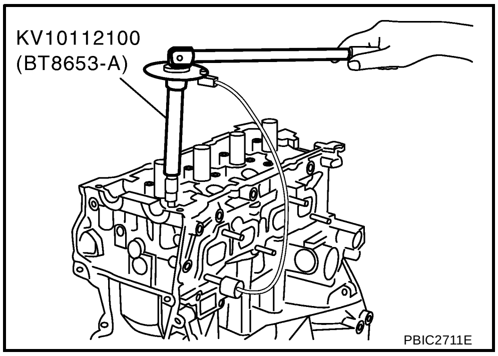


**CAUTION:**
**Check and confirm the tightening angle by using the angle wrench [SST] or protractor. Avoid judgment by visual inspection without the tool.**

d. Completely loosen.

**: 0 N·m (0 kg-m, 0 ft-lb)**

**CAUTION:**
**In this step, loosen bolts in reverse order of that indicated in the figure.**

e. Tighten all bolts.

**: 39.2 N·m (4.0 kg-m, 29 ft-lb)**

f. Turn all bolts 75 degrees clockwise (angle tightening).
g. Turn all bolts 75 degrees clockwise again (angle tightening).

3. Install in the reverse order of removal after this step.

## INSPECTION AFTER INSTALLATION

- Before starting the engine, check the levels of engine coolant, engine oil and working fluid. If less than required quantity, fill to the specified level.
- Use procedure below to make sure there are no fuel leaks.
  - Turn ignition switch "ON" (with the engine stopped). With fuel pressure applied to fuel piping, make sure there are no fuel leaks at connection points.
  - Start the engine. With engine speed increased, make sure again there are no fuel leaks at connection points.
- Run the engine to check for unusual noise and vibration.
- Warm up the engine thoroughly to make sure there is no leakage of engine coolant, engine oil, working fluid, fuel and exhaust gases.
- Bleed air from passages in pipes and tubes of applicable lines, such as in cooling system.
- After cooling down the engine, again check levels of engine coolant, engine oil and working fluid. Adjust to the specified level, if necessary.

**Summary of the inspection items:**

| Item | Before starting engine | Engine running | After engine stopped |
|---|---|---|---|
| Engine coolant | Level | Leakage | Level |
| Engine oil | Level | Leakage | Level |
| Working fluid | Level | Leakage | Level |
| Fuel | — | Leakage | — |
| Exhaust gases | — | Leakage | — |

## Disassembly and Assembly

ABS00CJJ

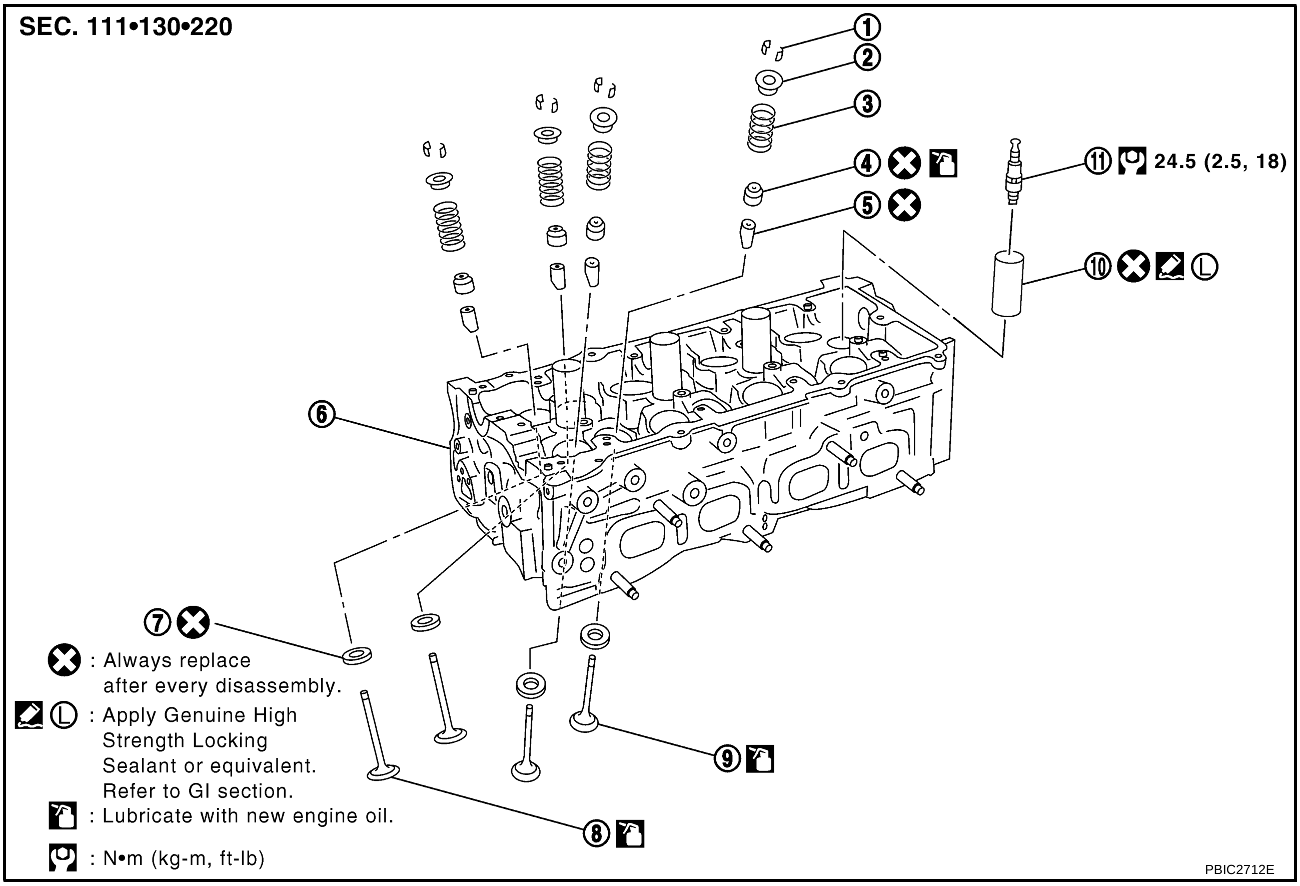


| | | |
|---|---|---|
| 1. Valve collet | 2. Valve spring retainer | 3. Valve spring (with valve spring seat) |
| 4. Valve oil seal | 5. Valve guide | 6. Cylinder head |
| 7. Valve seat | 8. Valve (INT) | 9. Valve (EXH) |
| 10. Spark plug tube | 11. Spark plug | |

### DISASSEMBLY

1. Remove spark plug with a spark plug wrench (commercial service tool).
2. Remove valve lifter.
   - Identify installation positions, and store them without mixing them up.
3. Remove valve collet.
   - Compress valve spring with the valve spring compressor, the attachment and the adapter [SST]. Remove valve collet with a magnet hand.

   **CAUTION:**
   **When working, be careful not to damage valve lifter holes.**

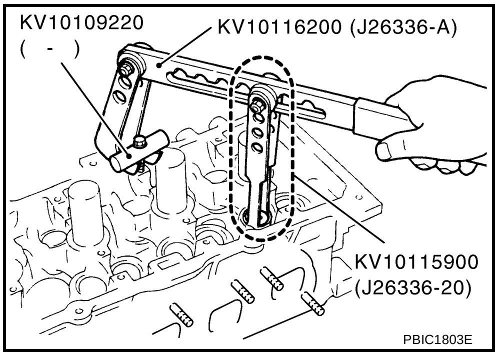


4. Remove valve spring retainer and valve spring (with valve spring seat).

   **CAUTION:**
   **Do not remove valve spring seat from valve spring.**
5. Push valve stem to combustion chamber side, and remove valve.
   - Identify installation positions, and store them without mixing them up.

6. Remove valve oil seal with the valve oil seal puller [SST].

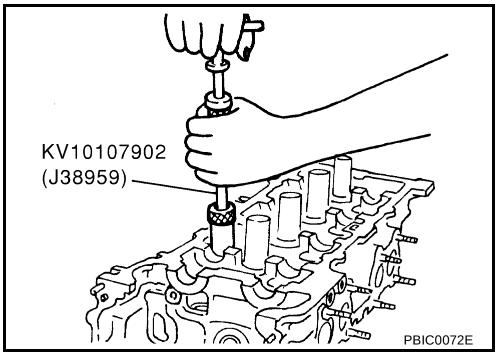


7. When valve seat must be replaced, refer to EM-71, "VALVE SEAT REPLACEMENT" to removal.
8. When valve guide must be replaced, refer to EM-69, "VALVE GUIDE REPLACEMENT" to removal.
9. Remove spark plug tube, if necessary.
   - Using pliers, remove it from cylinder head.

   **CAUTION:**
   - **Be careful not to damage cylinder head.**
   - **Do not remove spark plug tube if not necessary. Once removed, spark plug tube cannot be reused because of deformation.**

## ASSEMBLY

1. Install valve guide if removed. Refer to EM-69, "VALVE GUIDE REPLACEMENT" .
2. Install valve seat if removed. Refer to EM-71, "VALVE SEAT REPLACEMENT" .
3. Install valve oil seal.
   - Install with the valve oil seal drift [SST] to match dimension in the figure.

   **Height "H" : 11.8 - 12.4 mm (0.465 - 0.488 in)**

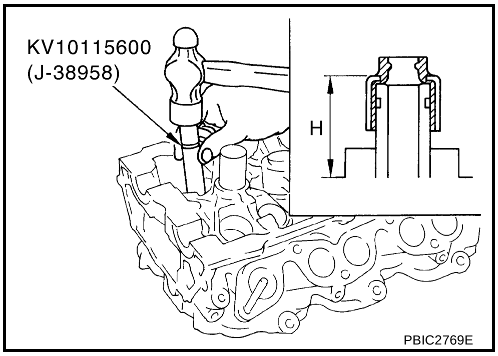


4. Install valve.
   - Install larger diameter to intake side.
5. Install valve spring (with valve spring seat).
   - Install smaller pitch (valve spring seat side) to cylinder head side.
   - Confirm identification color of valve spring.

   **Intake : Blue**
   **Exhaust : Yellow**

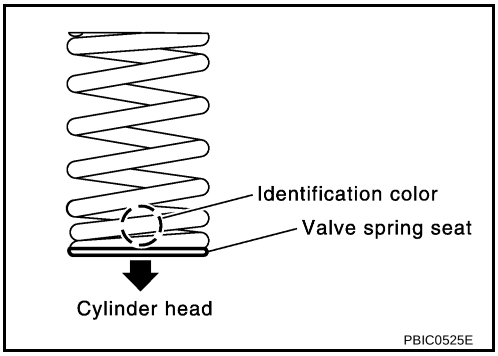


6. Install valve spring retainer.
7. Install valve collet.

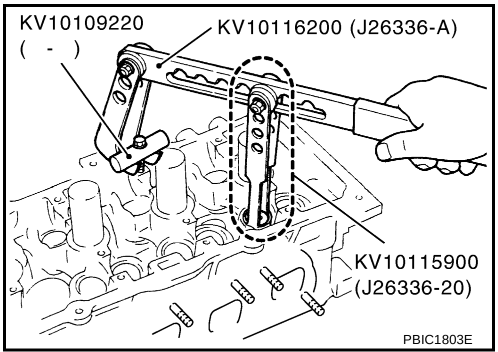

PBIC1803E

- Compress valve spring with the valve spring compressor, the attachment and the adapter [SST]. Install valve collet with a magnet hand.

  **CAUTION:**

  **When working, be careful not to damage valve lifter holes.**
- Tap valve stem edge lightly with a plastic hammer after installation to check its installed condition.

8. Install valve lifter.
9. Install spark plug tube if removed.
   - Press-fit it into cylinder head with the following procedure:

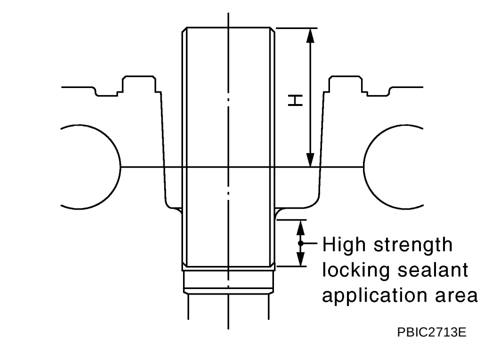

PBIC2713E

a. Remove old sealant from cylinder head side installation hole.

b. Apply sealant all round on spark plug tube within approximately 12 mm (0.47 in) width from edge of spark plug tube on the press-fit side.
**Use Genuine High Strength Locking Sealant or equivalent. Refer to** **GI-48, "RECOMMENDED CHEMICAL PRODUCTS AND SEALANTS"** **.**

c. Using a drift, press-fit spark plug tube so that height is as same as “H” shown in the figure.

**Standard press-fit height “H”:**

**41.2 - 42.2 mm (1.622 - 1.661 in)**

**CAUTION:**

- **When press-fitting, be careful not to deform spark plug tube.**
- **After press-fitting, wipe off any protruding sealant on top surface of cylinder head.**

10. Install spark plug with a spark plug wrench (commercial service tool).

## Inspection After Disassembly

*ABS00CJK*

### VALVE DIMENSIONS

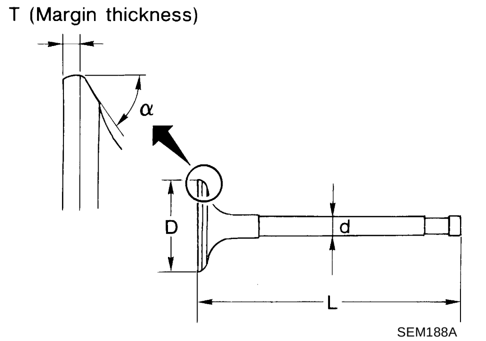

SEM188A

- Check dimensions of each valve. For dimensions, refer to EM-109, "Valve Dimensions" .
- If dimensions are out of the standard, replace valve.

## VALVE GUIDE CLEARANCE

### Valve Stem Diameter

Measure the diameter of valve stem with a micrometer.

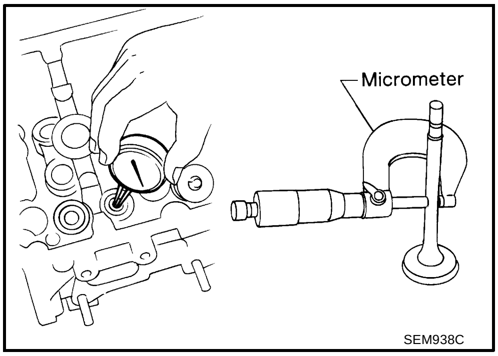


**Standard**

**Intake : 5.965 - 5.980 mm (0.2348 - 0.2354 in)**

**Exhaust : 5.955 - 5.970 mm (0.2344 - 0.2350 in)**

### Valve Guide Inner Diameter

Measure the inner diameter of valve guide with a bore gauge.

**Standard**

**Intake and Exhaust**

**: 6.000 - 6.018 mm (0.2362 - 0.2369 in)**

### Valve Guide Clearance

(Valve guide clearance) = (Valve guide inner diameter) – (Valve stem diameter).

**Valve guide clearance:**

**Standard**

**Intake : 0.020 - 0.053 mm (0.0008 - 0.0021 in)**

**Exhaust : 0.030 - 0.063 mm (0.0012 - 0.0025 in)**

**Limit**

**Intake : 0.08 mm (0.003 in)**

**Exhaust : 0.09 mm (0.004 in)**

- If it exceeds the limit, replace valve guide and/or valve. When valve guide must be replaced, refer to EM-69, "VALVE GUIDE REPLACEMENT" .

## VALVE GUIDE REPLACEMENT

When valve guide is removed, replace with oversized [0.2 mm (0.008 in)] valve guide.

1. To remove valve guide, heat cylinder head to 110 to 130°C (230 to 266°F) by soaking in heated oil.

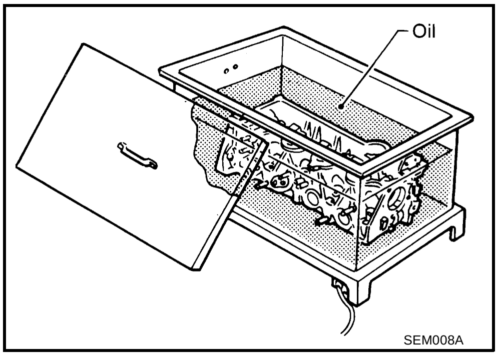

2. Drive out valve guide with a press [under a 20 kN (2 ton, 2.2 US ton, 2.0 Imp ton) force] or hammer and valve guide drift (commercial service tool).

   **CAUTION:**
   **Cylinder head contains heat, when working, wear protective equipment to avoid getting burned.**

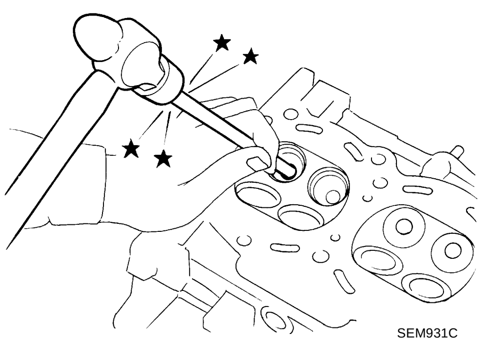

SEM931C

3. Ream cylinder head valve guide hole with a valve guide reamer (commercial service tool).

   **Valve guide hole diameter (for service parts):**

   **Intake and exhaust**

   **: 10.175 - 10.196 mm (0.4006 - 0.4014 in)**

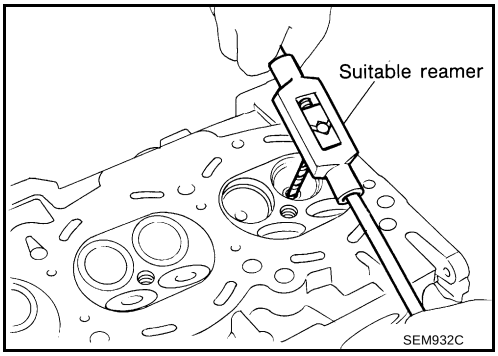


SEM932C

4. Heat cylinder head to 110 to 130°C (230 to 266°F) by soaking in heated oil.

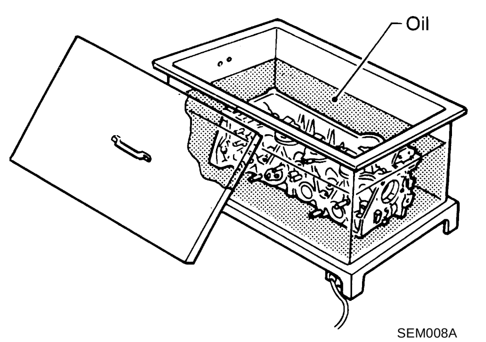


SEM008A

5. Using a valve guide drift (commercial service tool), press valve guide from camshaft side to dimensions as shown in the figure.

   **Projection "H":**

   | | |
   |---|---|
   | **Intake** | **: 10.1 - 10.3 mm (0.398 - 0.406 in)** |
   | **Exhaust** | **: 10.0 - 10.4 mm (0.394 - 0.409 in)** |

   **CAUTION:**
   **Cylinder head contains heat, when working, wear protective equipment to avoid getting burned.**

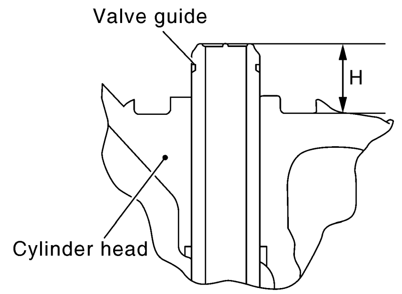


PBIC2187E

6. Apply reamer finish to valve guide with a valve guide reamer (commercial service tool).

   **Standard**

   **Intake and exhaust:**

   **6.000 - 6.018 mm (0.2362 - 0.2369 in)**

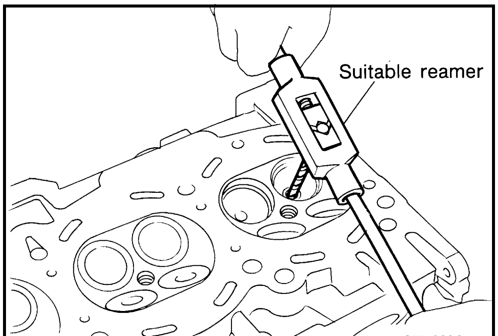


SEM932C

A
EM
C
D
E
F
G
H
I
J
K
L
M

## VALVE SEAT CONTACT

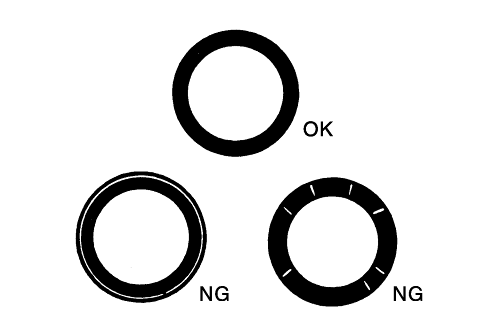

SBIA0322E

- After confirming that the dimensions of valve guides and valves are within specifications, perform this procedure.
- Apply prussian blue (or white lead) onto contacting surface of valve seat to check the condition of the valve contact on the surface.
- Check if the contact area band is continuous all around the circumference.
- If not, grind to adjust valve fitting and check again. If the contacting surface still has NG conditions even after the re-check, replace valve seat. Refer to EM-71, "VALVE SEAT REPLACEMENT" .

## VALVE SEAT REPLACEMENT

When valve seat is removed, replace with oversized [0.5 mm (0.020 in)] valve seat.

1. Bore out old seat until it collapses. Boring should not continue beyond the bottom face of the seat recess in cylinder head. Set the machine depth stop to ensure this. Refer to EM-112, "Valve Seat" .

   **CAUTION:**

   **Prevent to scratch cylinder head by excessive boring.**

2. Ream cylinder head recess diameter for service valve seat.

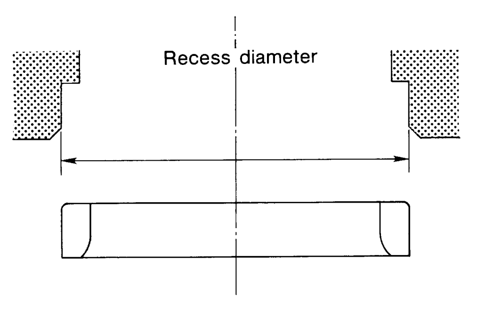

SEM795A

   **Oversize [0.5 mm (0.020 in)]**

   **Intake : 37.000 - 37.016 mm (1.4567 - 1.4573 in)**

   **Exhaust : 32.000 - 32.016 mm (1.2598 - 1.2605 in)**

   - Be sure to ream in circles concentric to the valve guide center. This will enable valve seat to fit correctly.

3. Heat cylinder head to 110 to 130°C (230 to 266°F) by soaking in heated oil.

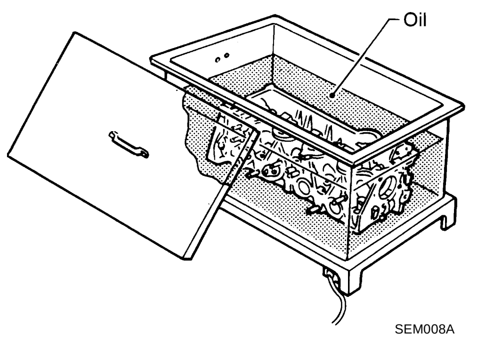

SEM008A

4. Provide valve seats cooled well with a dry ice. Press-fit valve seats into cylinder head.

   **CAUTION:**

   - **Avoid directly to touching cold valve seats.**
   - **Cylinder head contains heat, when working, wear protective equipment to avoid getting burned.**

5. Using a valve seat cutter set (commercial service tool) or a valve seat grinder, finish valve seat to the specified dimensions. For dimensions, refer to EM-112, "Valve Seat" .

   **CAUTION:**
   **When using a valve seat cutter, firmly grip the cutter handle with both hands. Then, press on the contacting surface all around the circumference to cut in a single drive. Improper pressure on with the cutter or cutting many different times may result in stage valve seat.**

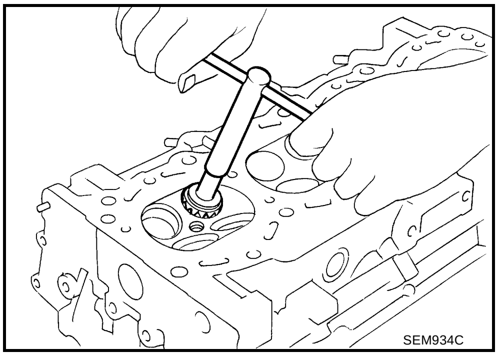
SEM934C

6. Using compound, grind to adjust valve fitting.
7. Check again for normal contact. Refer to EM-71, "VALVE SEAT CONTACT" .

## VALVE SPRING SQUARENESS

- Set a try square along the side of valve spring and rotate valve spring. Measure the maximum clearance between the top of valve spring and try square.

  **CAUTION:**
  **Do not remove valve spring seat from valve spring.**

  **Limit : 1.9 mm (0.075 in)**

- If it exceeds the limit, replace valve spring (with valve spring seat).

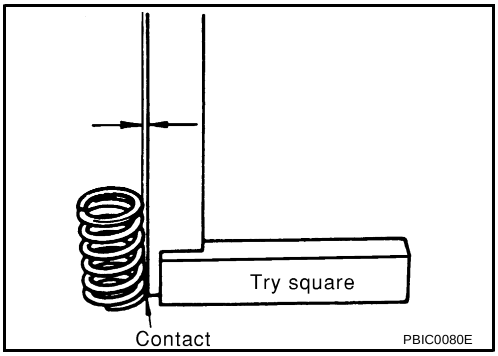

PBIC0080E

## VALVE SPRING DIMENSIONS AND VALVE SPRING PRESSURE LOAD

- Check valve spring pressure with valve spring seat installed at the specified spring height.

  **CAUTION:**
  **Do not remove valve spring seat from valve spring.**

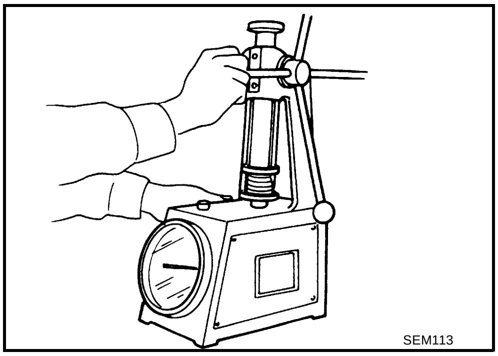
SEM113

**Standard:**

| Items | Intake | Exhaust |
|---|---|---|
| Free height | 44.84 - 45.34 mm (1.7654 - 1.7850 in) | 45.28 - 45.78 mm (1.7827 - 1.8024 in) |
| Installation height | 35.30 mm (1.390 in) | 35.30 mm (1.390 in) |
| Installation load | 151 - 175 N (15.4 - 17.8 kg, 34 - 39 lb) | 151 - 175 N (15.4 - 17.8 kg, 34 - 39 lb) |
| Height during valve open | 24.94 mm (0.9819 in) | 26.39 mm (1.0390 in) |
| Load with valve open | 358 - 408 N (36.5 - 41.6 kg, 80 - 92 lb) | 325 - 371 N (33.1 - 37.8 kg, 73 - 83 lb) |
| Identification color | Blue | Yellow |

- If the installation load or load with valve open is out of the standard, replace valve spring (with valve spring seat).

# ENGINE ASSEMBLY

PFP:10001

## Removal and Installation (2WD Models)

ABS00DAN

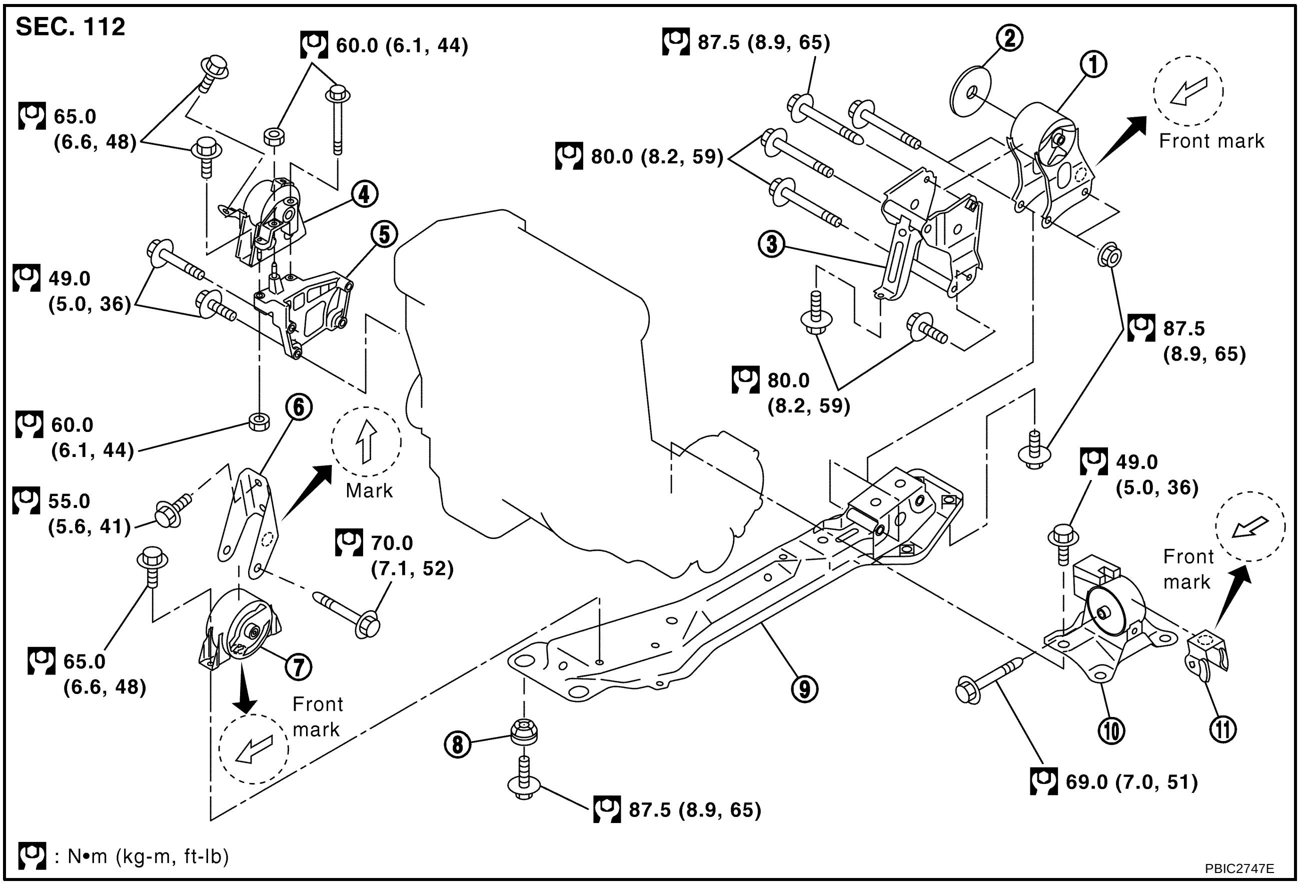


1. Rear engine mounting insulator
2. Rubber seat
3. Rear engine mounting bracket
4. RH engine mounting insulator
5. RH engine mounting bracket
6. Front engine mounting bracket
7. Front engine mounting insulator
8. Grommet
9. Center member
10. LH engine mounting insulator
11. Stopper

**WARNING:**

- **Situate the vehicle on a flat and solid surface.**
- **Place chocks at front and back of rear wheels.**
- **Attach proper slingers and bolts described in PARTS CATALOG if engine slingers are not equipped.**

**CAUTION:**

- **Always be careful to work safely, avoid forceful or uninstructed operations.**
- **Do not start working until exhaust system and coolant are cool enough.**
- **If items or work required are not covered by the engine section, refer to the applicable sections.**
- **Always use the support point specified for lifting.**
- **Use either 2-pole lift type or separate type lift as best you can. If board-on type is used for unavoidable reasons, support at the rear axle jacking point with a transmission jack or similar tool before starting work, in preparation for the backward shift of center of gravity.**
- **For supporting points for lifting and jacking point at rear axle, refer to GI-40, "Garage Jack and Safety Stand" .**

## REMOVAL

### Outline

Remove the engine and the transaxle assembly from the vehicle downward. Separate the engine and the transaxle.

### Preparation

1. Remove hood assembly. Refer to BL-12, "HOOD" .
2. Release fuel pressure.Refer to EC-90, "FUEL PRESSURE RELEASE" .
3. Drain engine coolant from radiator. Refer to CO-8, "Changing Engine Coolant" .

   **CAUTION:**
   - **Perform this step when the engine is cold.**
   - **Do not spill engine coolant on drive belt.**
4. Remove the following parts.
   - LH and RH undercovers
   - Front road wheels and tires
   - Battery and battery tray; Refer to SC-4, "BATTERY" .
   - Drive belt; Refer to EM-11, "DRIVE BELTS" .
   - Air duct and air cleaner case assembly; Refer to EM-14, "AIR CLEANER AND AIR DUCT" .
   - Alternator and alternator bracket; Refer to SC-20, "CHARGING SYSTEM" .
   - Radiator and radiator cooling fan assembly; Refer to CO-11, "RADIATOR" .
5. Disconnect engine room harness from the engine side and set it aside for easier work.
6. Disconnect all vacuum hoses and air hoses connected to the vehicle side at the engine side.

### Engine Room LH

1. Disconnect fuel feed hoses, and plug them to prevent fuel from draining. Refer to EM-30, "FUEL INJECTOR AND FUEL TUBE" .
2. Disconnect heater hoses, and install plugs them to prevent engine coolant from draining. Refer to CO-22, "THERMOSTAT AND WATER CONTROL VALVE" .
3. Disconnect control cable from transaxle. Refer to AT-251, "SHIFT CONTROL SYSTEM" .
4. Disconnect B terminal harness of starter motor. Refer to SC-9, "STARTING SYSTEM" .

### Engine Room RH

1. Remove reservoir tank of engine coolant. Refer to CO-11, "RADIATOR" .
2. Remove A/C compressor with piping connected from the engine. Temporarily secure it on the vehicle side with a rope to avoid putting load on it. Refer to ATC-122, "Removal and Installation of Compressor" (Automatic A/C models) or MTC-82, "Removal and Installation of Compressor" (Manual A/C models).
3. Remove power steering oil pump with piping connected from the engine. Temporarily secure it on the vehicle side with a rope to avoid putting load on it. Refer to PS-33, "HYDRAULIC LINE" .

### Vehicle Underbody

1. Remove exhaust front tube. Refer to EX-2, "EXHAUST SYSTEM" .
2. Remove rear plate cover from oil pan (upper). Then remove bolts fixing drive plate to torque converter. Refer to EM-22, "OIL PAN AND OIL STRAINER" and AT-269, "TRANSAXLE ASSEMBLY" .
3. Remove transaxle joint bolts which pierce at oil pan (upper) lower rear side. Refer to AT-269, "TRANSAXLE ASSEMBLY" .
4. Remove front wheel sensor (LH and RH) for ABS from steering knuckle. Refer to BRC-36, "WHEEL SENSORS" .
5. Remove brake caliper assembly with piping connected from steering knuckle. Temporarily secure it on the vehicle side with a rope to avoid load on it. Refer to BR-25, "FRONT DISC BRAKE" .
6. Remove LH and RH drive shafts from steering knuckle. Refer to FAX-13, "FRONT DRIVE SHAFT" .

### Removal

1. Install engine slingers into front-left of cylinder head and rear-right of cylinder head.

- Use alternator bracket mounting bolt holes for the front side.

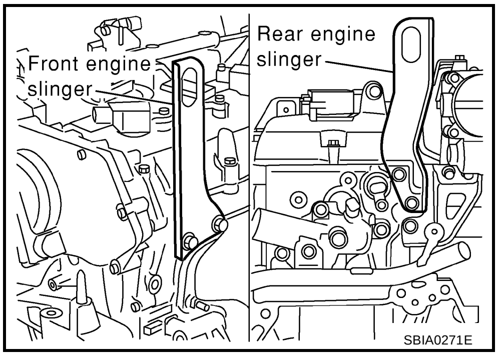


**Slinger bolts:**

**Front**

**: 57.9 N·m (5.9 kg-m, 43 ft-lb)**

**Rear**

**: 28.0 N·m (2.9 kg-m, 21 ft-lb)**

2. Lift with a hoist and secure the engine in appropriate position.
3. Use a manual lift table caddy (commercial service tool) or equivalently rigid tool such as a transmission jack. Securely support bottom of the engine and the transaxle, and simultaneously adjust hoist tension.

   **CAUTION:**

   **Put a piece of wood or something similar as the supporting surface, secure a completely stable condition.**

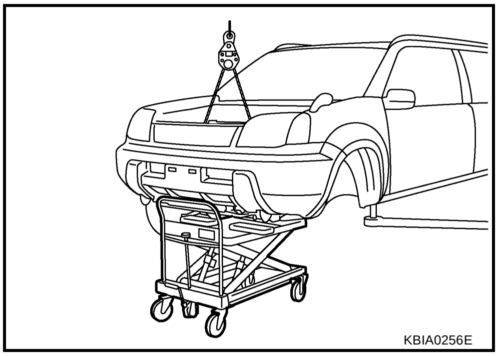


4. Remove RH engine mounting insulator with power tool.
5. Remove LH engine mounting through-bolt with power tool.
6. Remove center member with power tool.

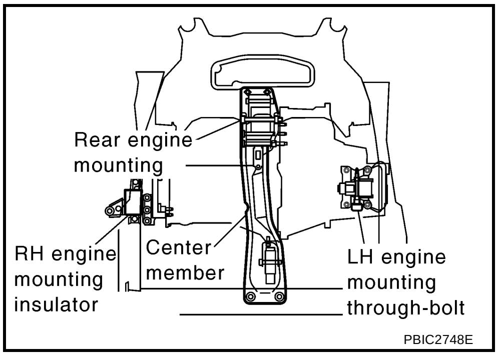


7. Remove the engine and the transaxle assembly from the vehicle downward by carefully operating supporting tools.

   **CAUTION:**

   - **During the operation, make sure that no part interferes with the vehicle side.**
   - **Before and during this lifting, always check if any harnesses are left connected.**
   - **During the removal operation, always be careful to prevent the vehicle from falling off the lift due to changes in the center of gravity.**
   - **If necessary, support the vehicle by setting jack or suitable tool at the rear.**
8. Remove starter motor. Refer to SC-9, "STARTING SYSTEM" .
9. Remove rear engine mounting bracket.
10. Separate the engine and the transaxle. Refer to AT-269, "TRANSAXLE ASSEMBLY" .

## INSTALLATION

Note the following, and install in the reverse order of removal.

- Do not allow engine oil to get on engine mounting insulator. Be careful not to damage engine mounting insulator.
- When installation directions are specified, install parts according to the direction marks on them referring to the figure of components. Refer to EM-73, "Removal and Installation (2WD Models)" .
- Make sure that each mounting insulator is seated properly, and tighten mounting nuts and bolts.

## INSPECTION AFTER INSTALLATION

- Before starting the engine, check the levels of engine coolant, engine oil and working fluid. If less than required quantity, fill to the specified level.
- Use procedure below to make sure there is no fuel leakage.
  - Turn ignition switch “ON” (with the engine stopped). With fuel pressure applied to fuel piping, make sure there are no fuel leaks at connection points.
  - Start the engine. With engine speed increased, make sure again if there are no fuel leaks at connection points.
- Run the engine to check for unusual noise and vibration.
- Warm up the engine thoroughly to make sure there is no leakage of engine coolant, engine oil, working fluid, fuel and exhaust gases.
- Bleed air from passages in pipes and tubes of applicable lines, such as in cooling system.
- After cooling down the engine, again check levels of engine coolant, engine oil and working fluid. Adjust to the specified level, if necessary.

**Summary of the inspection items:**

| Item | Before starting engine | Engine running | After engine stopped |
|---|---|---|---|
| Engine coolant | Level | Leakage | Level |
| Engine oil | Level | Leakage | Level |
| Working fluid | Level | Leakage | Level |
| Fuel | — | Leakage | — |
| Exhaust gases | — | Leakage | — |

## Removal and Installation (AWD Models)

ABS00CJL

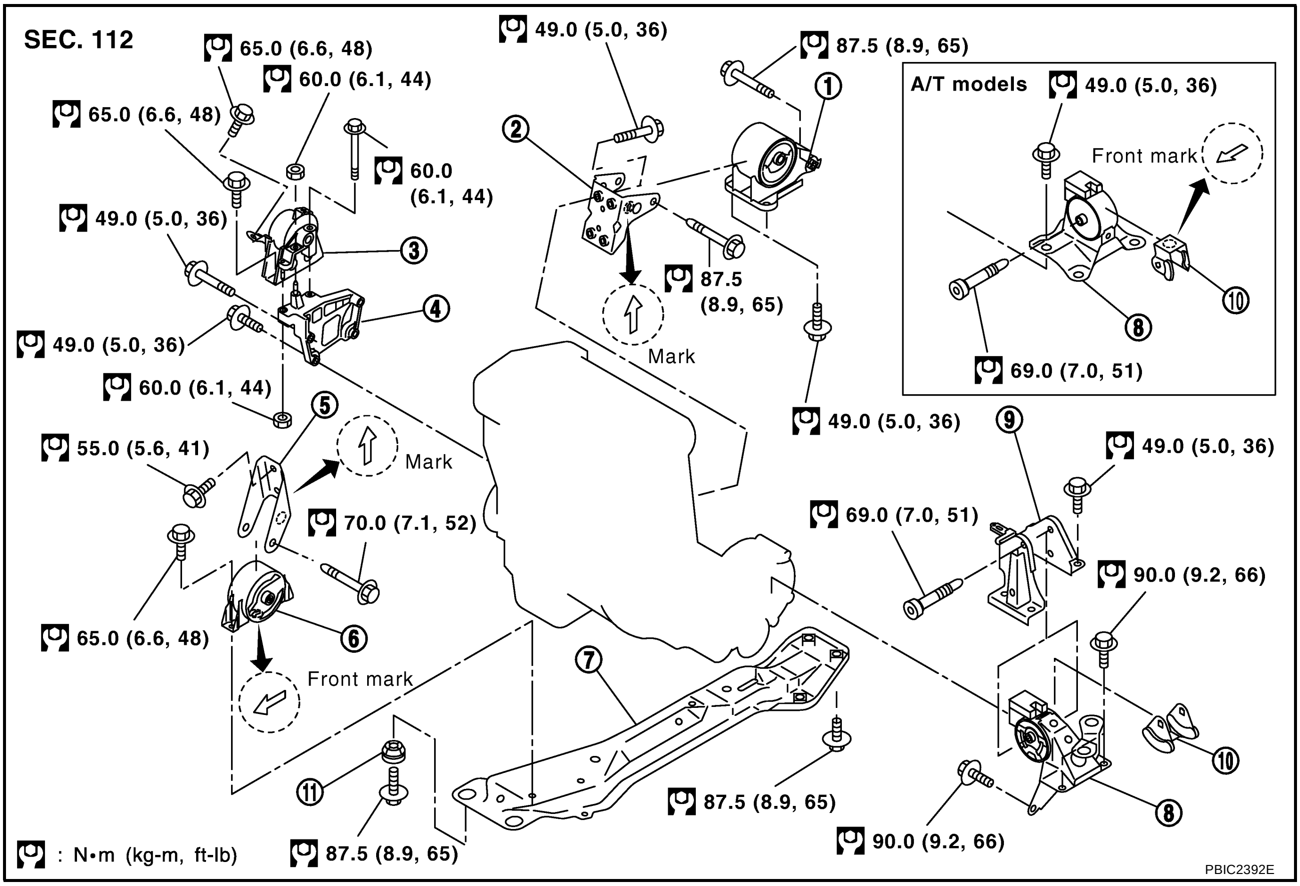


| | | | | | |
|---|---|---|---|---|---|
| 1. | Rear engine mounting insulator | 2. | Rear engine mounting bracket | 3. | RH engine mounting insulator |
| 4. | RH engine mounting bracket | 5. | Front engine mounting bracket | 6. | Front engine mounting insulator |
| 7. | Center member | 8. | LH engine mounting insulator | 9. | LH engine mounting bracket |
| 10. | Stopper | 11. | Grommet | | |

**WARNING:**

- **Situate the vehicle on a flat and solid surface.**
- **Place chocks at front and back of rear wheels.**
- **Attach proper slingers and bolts described in PARTS CATALOG if engine slingers are not equipped.**

**CAUTION:**

- **Always be careful to work safely, avoid forceful or uninstructed operations.**
- **Do not start working until exhaust system and engine coolant are cool enough.**
- **If items or work required are not covered by the engine section, refer to the applicable sections.**
- **Always use the support point specified for lifting.**
- **Use either 2-pole lift type or separate type lift as best you can. If board-on type is used for unavoidable reasons, support at the rear axle jacking point with a transmission jack or similar tool before starting work, in preparation for the backward shift of center of gravity.**
- **For supporting points for lifting and jacking point at rear axle, refer to GI-40, "Garage Jack and Safety Stand" .**

### REMOVAL

### Outline

Remove the engine, the transaxle and the transfer assembly with front suspension member from the vehicle downward. Separate front suspension member, and then separate the engine and the transaxle.

### Preparation

1. Remove hood assembly. Refer to BL-12, "HOOD" .

2. Release fuel pressure. Refer to EC-90, "FUEL PRESSURE RELEASE" .
3. Drain engine coolant from radiator. Refer to CO-8, "Changing Engine Coolant" .

   **CAUTION:**
   - **Perform this step when the engine is cold.**
   - **Do not spill engine coolant on drive belt.**
4. Remove the following parts.
   - LH and RH undercovers
   - Front road wheels and tires
   - Battery and battery tray; Refer to SC-4, "BATTERY" .
   - Drive belt; Refer to EM-11, "DRIVE BELTS" .
   - Air duct and air cleaner case assembly; Refer to EM-14, "AIR CLEANER AND AIR DUCT" .
   - Alternator; Refer to SC-20, "CHARGING SYSTEM" .
   - Radiator and radiator cooling fan assembly; Refer to CO-11, "RADIATOR" .
5. Disconnect engine room harness from the engine side and set it aside for easier work.
6. Disconnect all vacuum hoses and air hoses connected to the vehicle side at the engine side.

### Engine Room LH

1. Disconnect fuel feed hose, and plug it to prevent fuel from draining. Refer to EM-30, "FUEL INJECTOR AND FUEL TUBE"
2. Disconnect heater hoses, and install plugs them to prevent engine coolant from draining.
3. Disconnect control cable from transaxle (A/T models). Refer to AT-251, "SHIFT CONTROL SYSTEM" .
4. Disconnect clutch operating cylinder from transaxle, and move it aside (M/T models). Refer to CL-10, "OPERATING CYLINDER" .
5. Disconnect shift and select cable from transaxle (M/T models). Refer to MT-14, "CONTROL LINKAGE" .
6. Disconnect B terminal harness of starter motor. Refer to SC-9, "STARTING SYSTEM" .

### Engine Room RH

1. Remove reservoir tank of engine coolant. Refer to CO-11, "RADIATOR" .
2. Remove A/C compressor with piping connected from the engine. Temporarily secure it on the vehicle side with a rope to avoid putting load on it. Refer to ATC-122, "Removal and Installation of Compressor" (Automatic A/C models) or MTC-82, "Removal and Installation of Compressor" (Manual A/C models).

### Vehicle Underbody

1. Remove exhaust front tube. Refer to EX-2, "EXHAUST SYSTEM" .
2. Remove propeller shaft. Refer to PR-3, "REAR PROPELLER SHAFT" .
3. Remove steering lower joint from steering gear. Refer to PS-12, "STEERING COLUMN" .
4. Disconnect power steering fluid piping at a point between the vehicle and the engine. Refer to PS-33, "HYDRAULIC LINE" .
5. Remove rear plate cover from oil pan (upper). Then remove bolts fixing drive plate to torque converter (A/T models). Refer to EM-22, "OIL PAN AND OIL STRAINER" and AT-269, "TRANSAXLE ASSEMBLY" .
6. Remove transaxle joint bolts which pierce at oil pan (upper) lower rear side. Refer to MT-17, "TRANSAXLE ASSEMBLY" (M/T models) or AT-269, "TRANSAXLE ASSEMBLY" (A/T models).
7. Remove front wheel sensor (LH and RH) for ABS from steering knuckle. Refer to BRC-36, "WHEEL SENSORS" (ABS) or BRC-96, "WHEEL SENSORS" (VDC/TCS/ABS).
8. Remove brake caliper assembly with piping connected from steering knuckle. Temporarily secure it on the vehicle side with a rope to avoid load on it. Refer to BR-25, "FRONT DISC BRAKE" .
9. Remove lower ends of left and right strut from steering knuckle. Refer to FSU-6, "FRONT SUSPENSION ASSEMBLY" .

### Removal

1. Install engine slingers into front-left of cylinder head and rear-right of cylinder head.

- Use alternator bracket mounting bolt holes for the front side.

**Slinger bolts:**

**Front**

**: 57.9 N·m (5.9 kg-m, 43 ft-lb)**

**Rear**

**: 28.0 N·m (2.9 kg-m, 21 ft-lb)**

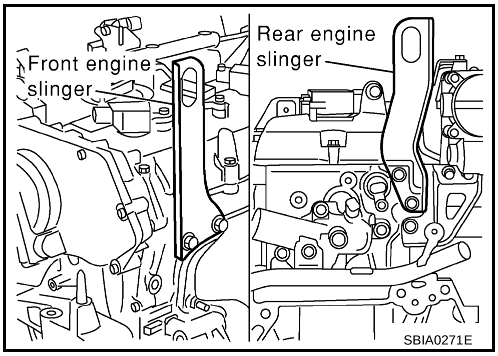


2. Lift with a hoist and secure the engine in appropriate position.
3. Use a manual lift table caddy (commercial service tool) or equivalently rigid tool such as a transmission jack. Securely support bottom of the engine and the transaxle, and simultaneously adjust hoist tension.

   **CAUTION:**

   **Put a piece of wood or something similar as the supporting surface, secure a completely stable condition.**

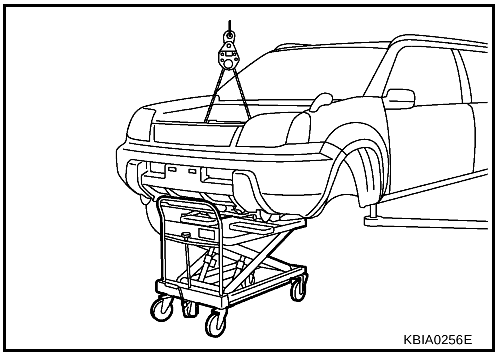


4. Remove RH engine mounting insulator with power tool.
5. Remove LH engine mounting through-bolt with power tool.

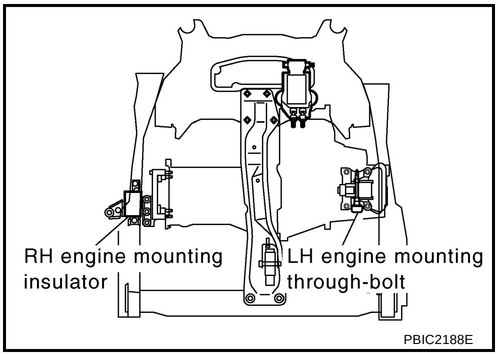


6. Remove mounting bolts at front end of center member with power tool.
7. Remove front suspension member mounting nuts and bolts. Refer to FSU-6, "FRONT SUSPENSION ASSEMBLY" .

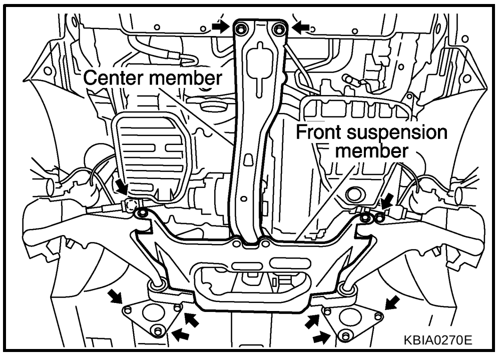


8. Remove the engine, the transaxle and the transfer assembly with front suspension member and center member from the vehicle downward by carefully operating supporting tools.

   **CAUTION:**

   - **During the operation, make sure that no part interferes with the vehicle side.**
   - **Before and during this lifting, always check if any harnesses are left connected.**
   - **During the removal operation, always be careful to prevent the vehicle from falling off the lift due to changes in the center of gravity.**
   - **If necessary, support the vehicle by setting a jack or suitable tool at the rear.**

9. Remove power steering oil pump with piping connected from the engine. Move it aside on front suspension member. Refer to PS-33, "HYDRAULIC LINE" .
10. Remove front engine mounting and rear engine mounting through-bolts to remove front suspension member and center member with power tool.
11. Remove starter motor with power tool. Refer to SC-9, "STARTING SYSTEM" .
12. Separate the engine and transaxle. Refer to MT-17, "TRANSAXLE ASSEMBLY" (M/T models) or AT-269, "TRANSAXLE ASSEMBLY" (A/T models).

## INSTALLATION

Note the following, and install in the reverse order of removal.

- Do not allow engine oil to get on engine mounting insulator. Be careful not to damage engine mounting insulator.
- When installation directions are specified, install parts according to the direction marks on them referring to figure of components. Refer to EM-77, "Removal and Installation (AWD Models)" .
- Make sure that each mounting insulator is seated properly, and tighten mounting nuts and bolts.

## INSPECTION AFTER INSTALLATION

- Before starting the engine, check the levels of engine coolant, engine oil and working fluid. If less than required quantity, fill to the specified level.
- Use procedure below to make sure there is no fuel leakage.
  - Turn ignition switch “ON” (with the engine stopped). With fuel pressure applied to fuel piping, make sure there are no fuel leaks at connection points.
  - Start the engine. With engine speed increased, check again if there are no fuel leaks at connection points.
- Run the engine to check for unusual noise and vibration.
- Warm up the engine thoroughly to make sure there is no leakage of engine coolant, engine oil, working fluid, fuel and exhaust gases.
- Bleed air from passages in pipes and tubes of applicable lines, such as in cooling system.
- After cooling down the engine, again check levels of engine coolant, engine oil and working fluid. Adjust to the specified level, if necessary.

**Summary of the inspection items:**

| Item | Before starting engine | Engine running | After engine stopped |
|---|---|---|---|
| Engine coolant | Level | Leakage | Level |
| Engine oil | Level | Leakage | Level |
| Working fluid | Level | Leakage | Level |
| Fuel | — | Leakage | — |
| Exhaust gases | — | Leakage | — |

# CYLINDER BLOCK

PFP:11010

## Disassembly and Assembly

ABS00CJM

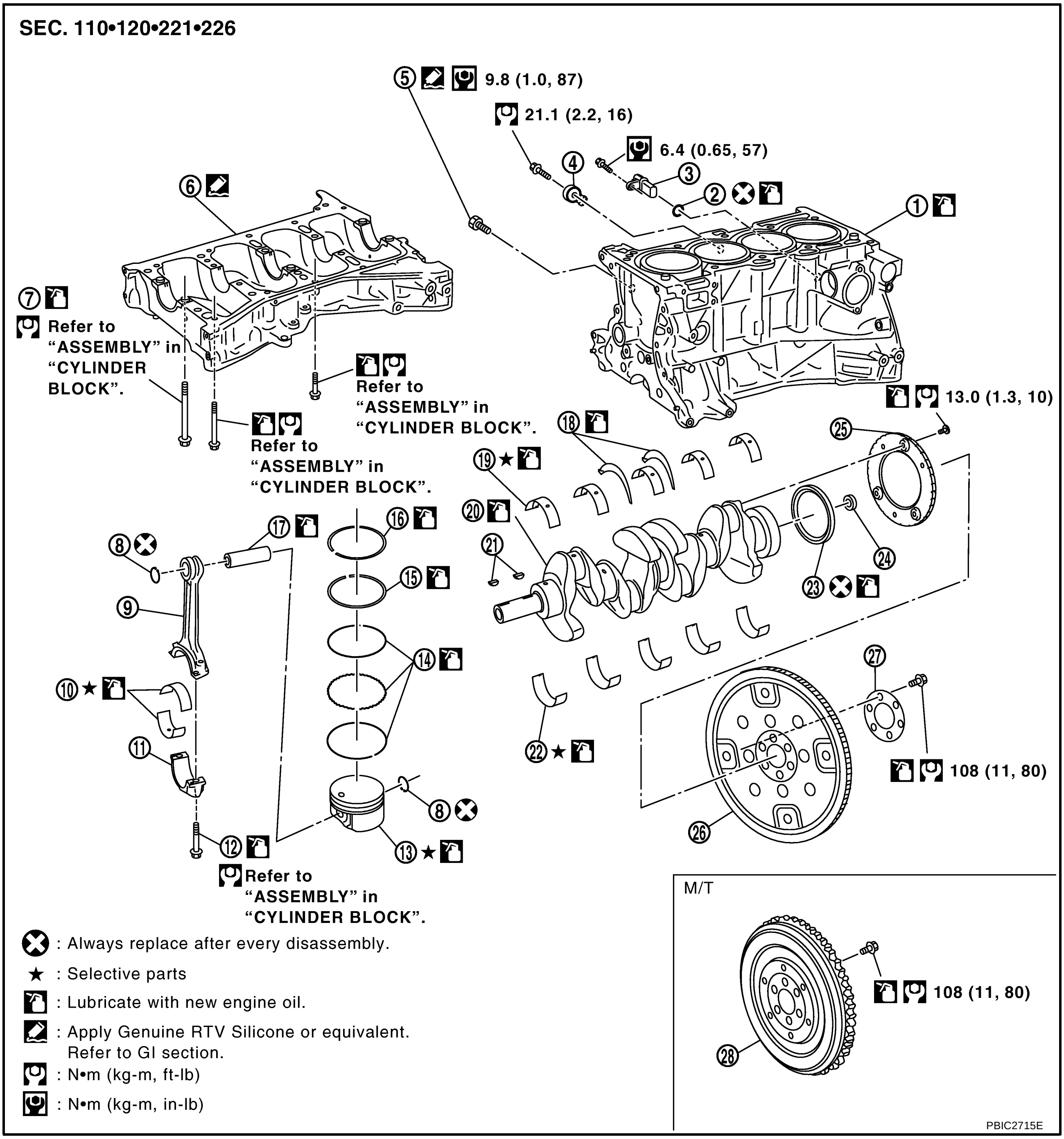


1. Cylinder block
2. O-ring
3. Crankshaft position sensor (POS)
4. Knock sensor
5. Water drain plug
6. Lower cylinder block
7. Lower cylinder block mounting bolt
8. Snap ring
9. Connecting rod
10. Connecting rod bearing
11. Connecting rod bearing cap
12. Connecting rod bolt
13. Piston
14. Oil ring
15. Second ring
16. Top ring
17. Piston pin
18. Thrust bearing
19. Main bearing upper
20. Crankshaft
21. Crankshaft key
22. Main bearing lower
23. Rear oil seal
24. Pilot convertor (A/T models)
25. Signal plate
26. Drive plate (A/T models)
27. Reinforce plate (A/T models)
28. Flywheel (M/T models)

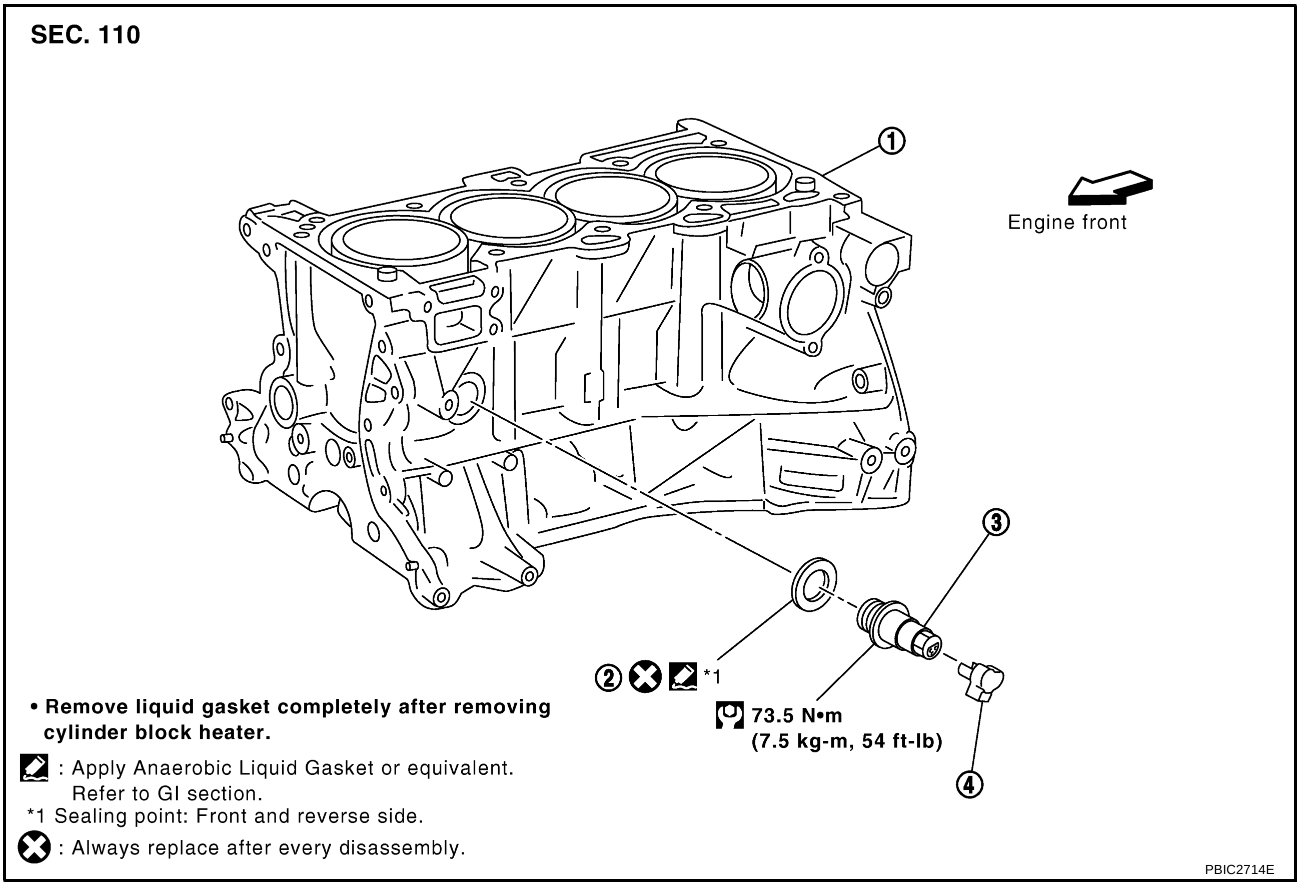


1. Cylinder block
2. Gasket
3. Cylinder block heater
4. Connector protector cap

## DISASSEMBLY

**NOTE:**

Explained here is how to disassemble with an engine stand supporting mating surface of transaxle. When using different type of engine stand, note with difference in steps and etc.

1. Remove the engine, the transaxle and the transfer (AWD models) assembly from the vehicle, and separate the transaxle and the transfer (AWD models) assembly from the engine. Refer to EM-73, "ENGINE ASSEMBLY" .
2. Remove clutch cover and clutch disc (M/T models). Refer to CL-14, "CLUTCH DISC, CLUTCH COVER AND FLYWHEEL" .
3. Remove flywheel (M/T models) or drive plate (A/T models) with power tool.

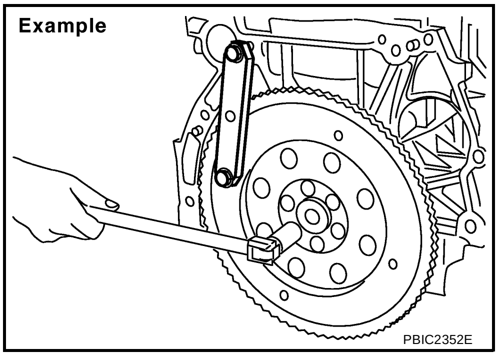


   - Secure crankshaft with a stopper plate, and remove mounting bolts.
   - Using the following TORX socket, loosen mounting bolts.

   **Flywheel (M/T models)**
   **: size T55 (commercial service tool)**
   **Drive plate (A/T models)**
   **: size E20**

   **CAUTION:**
   **Be careful not to damage or scratch drive plate (A/T models) and contact surface for clutch disc of flywheel (M/T models).**

   **NOTE:**
   The flywheel, two block construction, allows movement in response to transaxle side pressure, or when twisted in its rotational direction. Therefore, some amount of noise is normal.

4. Lift the engine with a hoist to install it onto widely use engine stand.

   **CAUTION:**
   - **Use the engine stand that has a load capacity [approximately 150kg (331 lb) or more] large enough for supporting the engine weight.**
   - **Before removing the hanging chains, make sure the engine stand is stable and there is no risk of overturning.**

   **NOTE:**
   The figure shows an example of widely use engine stand that can support mating surface of transaxle with flywheel (M/T models) or drive plate (A/T models) removed.

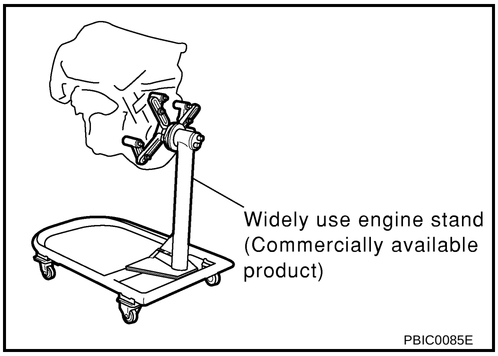


5. Drain engine oil. Refer to LU-7, "Changing Engine Oil" .
6. Drain engine coolant by removing water drain plug from inside of the engine.

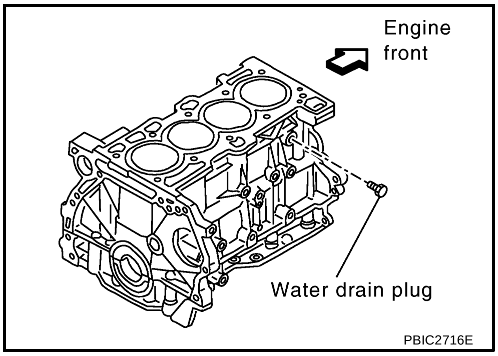


7. Remove cylinder head with power tool. Refer to EM-62, "CYLINDER HEAD" .
8. Remove knock sensor.

   **CAUTION:**
   **Carefully handle knock sensor avoiding shocks.**
9. Remove crankshaft position sensor (POS).

   **CAUTION:**
   - **Avoid impacts such as a dropping.**
   - **Do not disassemble.**
   - **Keep it away from metal particles.**
   - **Do not place the sensor in a location where it is exposed to magnetism.**

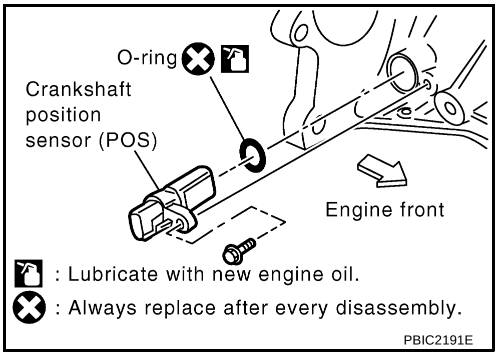


10. Remove pilot converter using the pilot bushing puller [SST] or suitable tool. (A/T models)

    **NOTE:**
    M/T models have no pilot bushing.

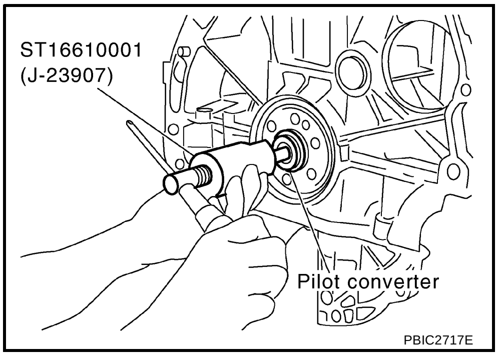


11. Remove piston and connecting rod assembly with the following procedure:
    - Before removing piston and connecting rod assembly, check the connecting rod side clearance. Refer to EM-98, "CONNECTING ROD SIDE CLEARANCE" .

a. Position crankshaft pin corresponding to connecting rod to be removed onto the bottom dead center.

b. Remove connecting rod cap.

c. Using a hammer handle or similar tool, push piston and connecting rod assembly out to the cylinder head side.

**CAUTION:**

**Be careful not to damage the cylinder wall and crankshaft pin, resulting from an interference of the connecting rod big end.**

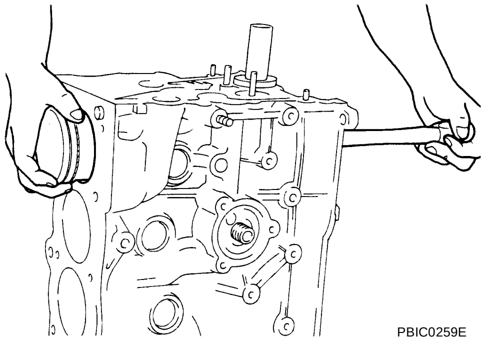

PBIC0259E

12. Remove connecting rod bearings.

**CAUTION:**

**Identify installation positions, and store them without mixing them up.**

13. Remove piston rings form piston.

- Before removing piston rings, check the piston ring side clearance. Refer to EM-99, "PISTON RING SIDE CLEARANCE" .
- Use a piston ring expander (commercial service tool).

  **CAUTION:**

  - **When removing piston rings, be careful not to damage the piston.**
  - **Be careful not to damage piston rings by expanding them excessively.**

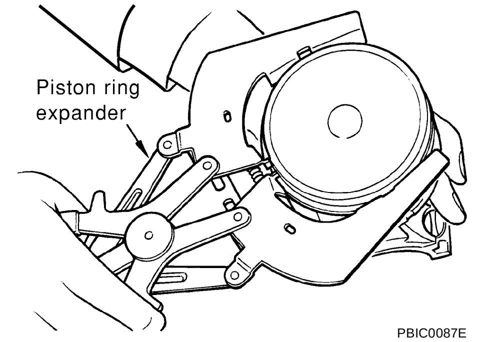


PBIC0087E

14. Remove piston from connecting rod with the following procedure:

a. Using snap ring pliers, remove snap rings.

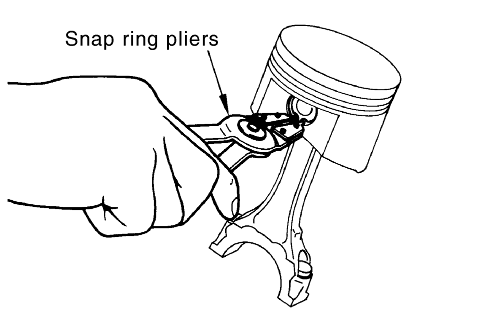


PBIC1638E

b. Heat piston to 60 to 70°C (140 to 158°F) with an industrial use drier or equivalent.

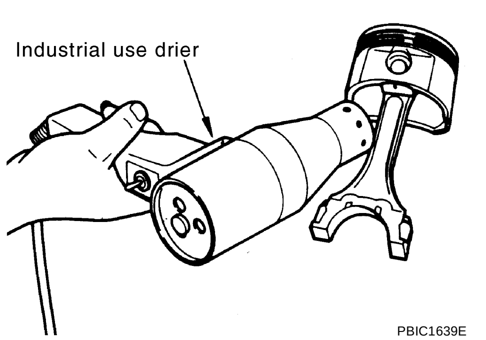


PBIC1639E

c. Push out piston pin with a stick of outer diameter approximately 19 mm (0.75 in).

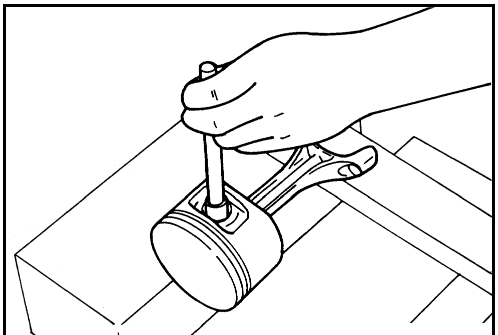
PBIC0262E

15. Remove lower cylinder block mounting bolts.
- Before loosening lower cylinder block mounting bolts, measure crankshaft end play. Refer to EM-98, "CRANKSHAFT END PLAY"
- Loosen them in reverse order as shown in the figure, and remove them.

**NOTE:**
Use TORX socket (size E14) for bolts No. 1 to 10.

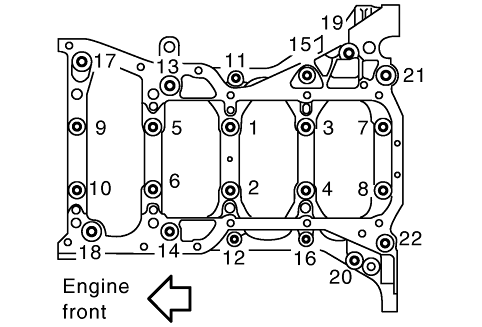

PBIC2718E

16. Remove lower cylinder block.
- Use the seal cutter [SST: KV10111100 (J37228)] or suitable tool to cut liquid gasket for removal.

**CAUTION:**
**Be careful not to damage the mounting surface.**

17. Remove crankshaft.

**CAUTION:**
- **Be careful not damage or deform signal plate mounted on crankshaft.**
- **When setting crankshaft on a flat floor surface, use a block of wood to avoid interference between signal plate and the floor surface.**
- **Do not remove signal plate unless it is necessary to do so.**

**NOTE:**
When removing or installing signal plate, use TORX socket (size T30).

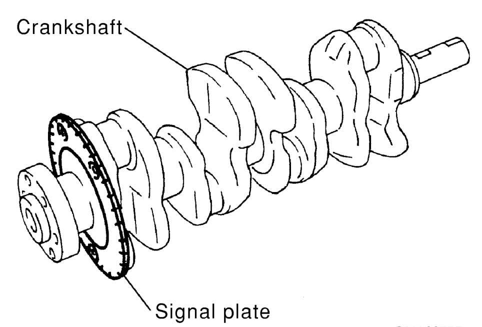

SBIA0275E

18. Pull rear oil seal out from rear end of crankshaft.

**NOTE:**
When replacing rear oil seal without removing lower cylinder block, use a screwdriver to pull the oil seal installed between crankshaft and cylinder block out.

**CAUTION:**
**Be careful not to damage crankshaft and cylinder block.**

19. Remove main bearings and thrust bearings from cylinder block and lower cylinder block.

**CAUTION:**
**Identify installation positions, and store them without mixing them up.**

## ASSEMBLY

1. Fully air-blow engine coolant and engine oil passages in cylinder block, cylinder bore and crankcase to remove any foreign material.

**CAUTION:**
**Use a goggles to protect your eye.**

2. Install each plug to cylinder block as shown in the figure.
   - Apply liquid gasket to the thread of water drain plug “A”.
     **Use Genuine RTV Silicone Sealant or equivalent. Refer to** GI-48, "RECOMMENDED CHEMICAL PRODUCTS AND SEALANTS" **.**

     **NOTE:**
     Do not apply liquid gasket to the thread of plug “B”.

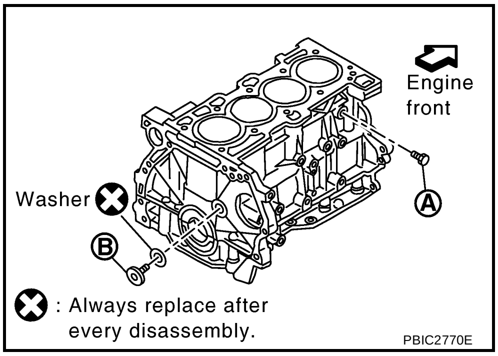


   - Tighten each plug as specified below.

| Part | Washer | Tightening torque |
|---|---|---|
| A | No | 9.8 N·m (1.0 kg-m, 87 in-lb) |
| B | Yes | 53.9 N·m (5.5 kg-m, 40 ft-lb) |

3. Install main bearings and thrust bearings with the following procedure:

a. Remove dust, dirt, and engine oil on the bearing mating surfaces of cylinder block and lower cylinder block.

b. Install thrust bearings to the both sides of the No. 3 journal housing on cylinder block.
   - Install thrust bearings with the oil groove facing crankshaft arm (outside).

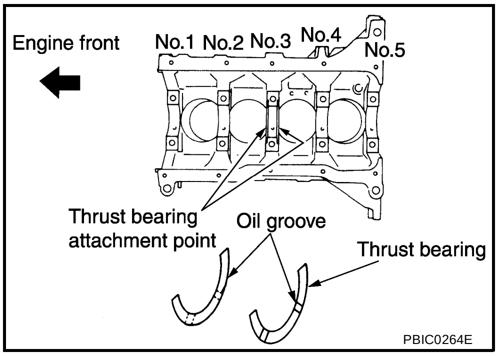


c. Install the main bearings paying attention to the direction.
   - Main bearing with an oil hole and groove goes on cylinder block. The one without them goes on lower cylinder block.
   - Only main bearing (on cylinder block) for No. 3 journal has different specifications.
   - Before installing main bearings, apply new engine oil to the bearing surface (inside). Do not apply engine oil to the back surface, but thoroughly clean it.
   - When installing, align main bearing stopper to the notch.
   - Ensure the oil holes on cylinder block and those on the corresponding bearing are aligned.

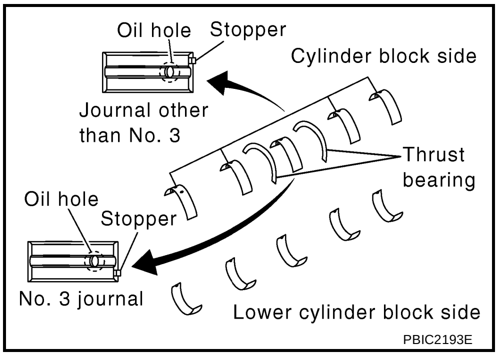


4. Install signal plate to crankshaft if removed.

a. Position crankshaft and signal plate using a dowel pin, and tighten mounting bolts.

**NOTE:**
Dowel pin of crankshaft and signal plate is provided as a set for each. If dowel pin is not available (when reusing crankshaft and signal plate), use M6 bolt [length 10 mm (0.39 in) or more] as a substitute.

b. Remove dowel pin.

**CAUTION:**
**Be sure to remove dowel pin.**

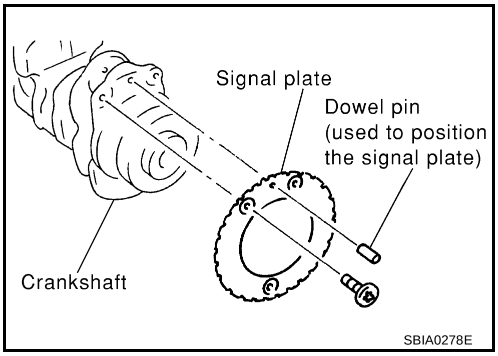


5. Install crankshaft to cylinder block.
   - While turning crankshaft by hand, make sure that it turns smoothly.

**CAUTION:**
**Do not install rear oil seal yet.**

6. Inspect outer diameter of lower cylinder block mounting bolts. Refer to EM-106, "LOWER CYLINDER BLOCK MOUNTING BOLT OUTER DIAMETER" .
7. Install lower cylinder block with the following procedure:

a. Apply liquid gasket with the tube presser [SST: WS39930000 ( — )] to lower cylinder block as shown in the figure.
**Use Genuine RTV Silicone Sealant or equivalent. Refer to GI-48, "RECOMMENDED CHEMICAL PRODUCTS AND SEALANTS" .**

**CAUTION:**
**After liquid gasket is applied, rear oil seal installation must be finished within 5 minutes. Therefore, the following procedure must be performed quickly.**

**NOTE:**
Lower cylinder block cannot be replaced as a single part, because it is machined together with cylinder block.

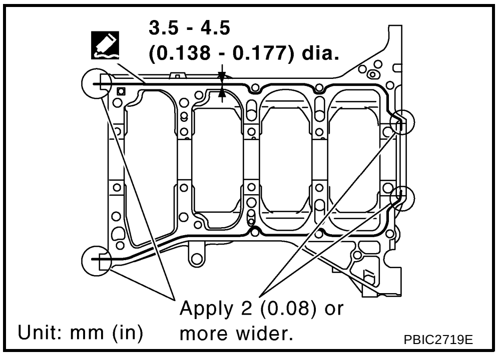


b. Tighten lower cylinder block mounting bolts with the following procedure:

i. Apply new engine oil to threads and seat surfaces of the mounting bolts.

ii. Tighten M8 bolts in numerical order from No. 11 to 22 in the figure.

: 25.1 N·m (2.6 kg-m, 19 ft-lb)

**CAUTION:**
**Wipe off completely any protruding liquid gasket on rear oil seal installation surface.**

**NOTE:**
There are more processes to complete the tightening of mounting bolts. However stop procedure here to install rear oil seal.

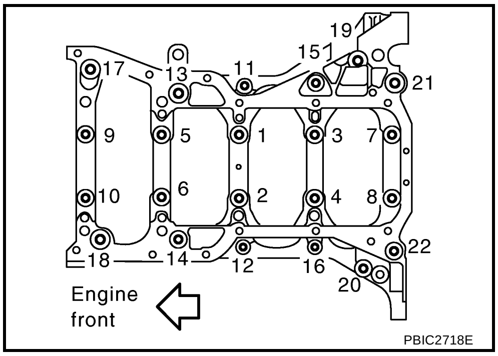


c. Install rear oil seal. Refer to EM-61, "Removal and Installation of Rear Oil Seal" .

d. Restart tightening of lower cylinder block mounting bolts with the following procedure:

i. Tighten M10 bolts in numerical order from No. 1 to 10 in the figure.

: 39.2 N·m (4.0 kg-m, 29 ft-lb)

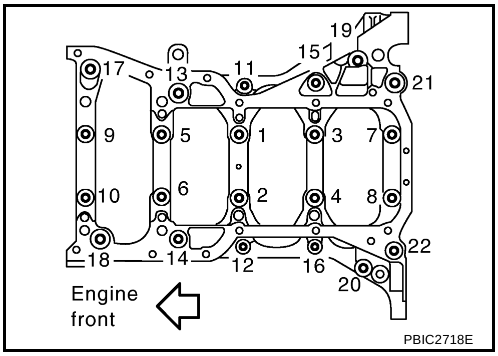

ii. Turn M10 bolts 60 degrees clockwise (angle tightening) in numerical order from No. 1 to 10 in the figure.

**CAUTION:**

**Check and confirm the tightening angle by using the angle wrench [SST] or protractor. Avoid judgment by visual inspection without the tool.**

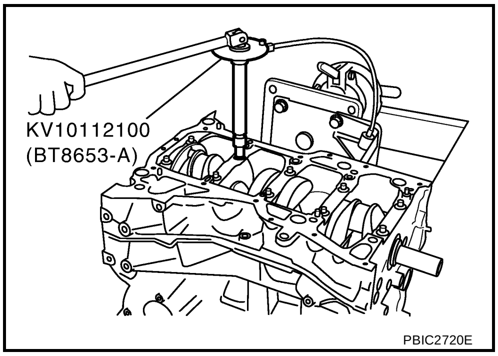


- After installing the mounting bolts, make sure that crankshaft can be rotated smoothly by hand.
- Wipe off completely any protruding liquid gasket on front side of the engine.
- Check crankshaft end play. Refer to EM-98, "CRANKSHAFT END PLAY" .

8. Install piston to connecting rod with the following procedure:

a. Using snap ring pliers, install new snap ring to the groove of the piston rear side.
   - Insert it fully into groove to install.

b. Assemble piston to connecting rod.
   - Using an industrial drier or similar tool, heat piston until piston pin can be pushed in by hand without excess force [approximately 60 to 70 °C (140 to 158 °F)]. From the front to the rear, insert piston pin into piston and connecting rod.
   - Assemble so that the front mark on the piston head and the oil holes and the cylinder number on connecting rod are positioned as shown in the figure.

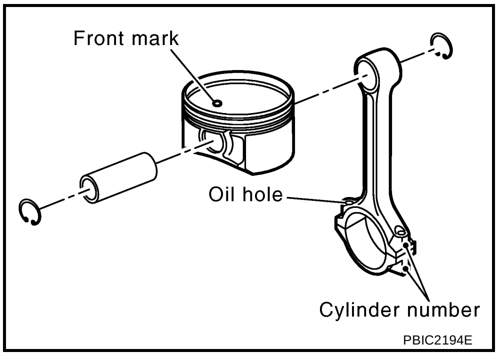


c. Install new snap ring to the groove of the piston front side.
   - Insert it fully into groove to install.
   - After installing, make sure that connecting rod moves smoothly.

9. Using a piston ring expander (commercial service tool), install piston rings.

**CAUTION:**

- **Be careful not to damage piston.**
- **Be careful not to damage piston rings by expanding them excessively.**
- Position each ring with the gap as shown in the figure referring to the piston front mark.
- Install second ring with the stamped surface facing upward.

**Stamped mark:**

**Top ring : —**

**Second ring : 2F**

**NOTE:**

If there is no stamped mark on piston ring, no specific orientation is required for installation.

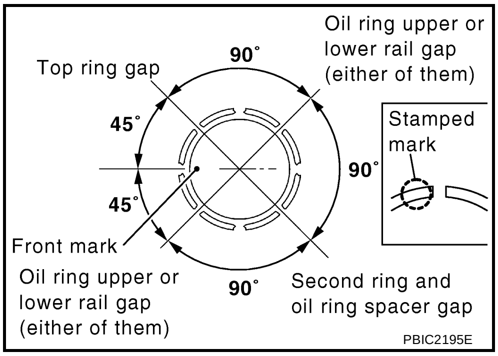


10. Inspect outer diameter of connecting rod bolts. Refer to EM-106, "CONNECTING ROD BOLT OUTER DIAMETER" .

11. Install connecting rod bearings to connecting rod and connecting rod cap.
    - When installing connecting rod bearings, apply new engine oil to the bearing surface (inside). Do not apply engine oil to the back surface, but thoroughly clean it.

- When installing, align the connecting rod bearing stopper protrusion with the cutout of connecting rod and connecting rod cap to install.
- Ensure the oil hole on connecting rod and that on the corresponding bearing are aligned.

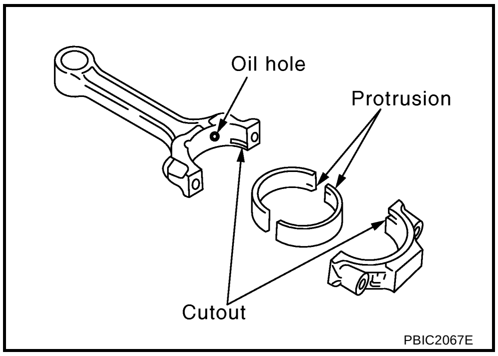


12. Install piston and connecting rod assembly to crankshaft.
    - Position crankshaft pin corresponding to connecting rod to be installed onto the bottom dead center.
    - Apply new engine oil sufficiently to the cylinder bore, piston and crankshaft pin.
    - Match the cylinder position with the cylinder number on connecting rod to install.
    - Using the piston ring compressor [SST] or suitable tool, install piston with the front mark on the piston head facing the front of the engine.

    **CAUTION:**
    **Be careful not to damage the cylinder wall and crankshaft pin, resulting from an interference of the connecting rod big end.**

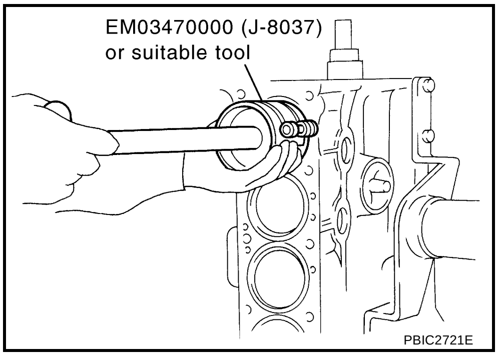


13. Install connecting rod cap.
    - Match the stamped cylinder number marks on connecting rod with those on connecting rod cap to install.

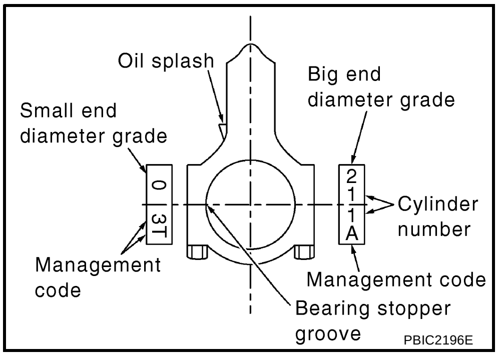


14. Tighten connecting rod bolt with the following procedure:

a. Apply new engine oil to the threads and seats of connecting rod bolts.

b. Tighten bolts in several steps.

   **: 19.6 N·m (2.0 kg-m, 14 ft-lb)**

c. Then turn all bolts 90 degrees clockwise (angle tightening).

   **CAUTION:**
   **Check and confirm the tightening angle by using the angle wrench [SST] or protractor. Avoid judgement by visual inspection without the tool.**

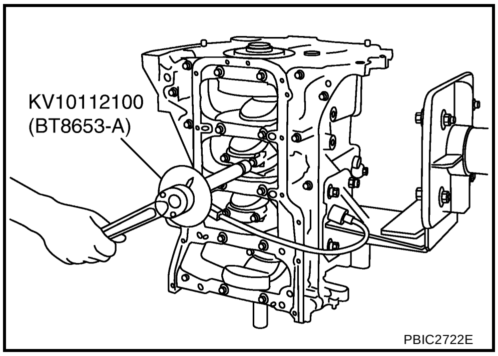

- After tightening connecting rod bolt, make sure that crankshaft rotates smoothly.
- Check the connecting rod side clearance. Refer to EM-98, "CONNECTING ROD SIDE CLEARANCE" .

15. Install flywheel (M/T models) or drive plate (A/T models).
    - Secure crankshaft with a stopper plate, and tighten mounting bolts crosswise over several times.
    - Install drive plate, reinforcement plate and pilot converter as shown in the figure (A/T models).
    - Using a drift of 33 mm (1.30 in) in diameter, press-fit pilot converter into the end of crankshaft until it stops (A/T models).

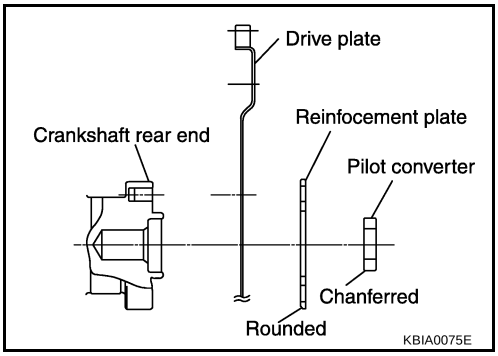


16. Install knock sensor.
    - Install knock sensor with connector facing lower left by 45 degrees as shown in the figure.

    **CAUTION:**
    - **Do not tighten mounting bolt while holding the connector.**
    - **If any impact by dropping is applied to knock sensor, replace it with a new one.**

    **NOTE:**
    - Make sure that there is no foreign material on the cylinder block mating surface and the back surface of knock sensor.
    - Make sure that knock sensor does not interfere with other parts.

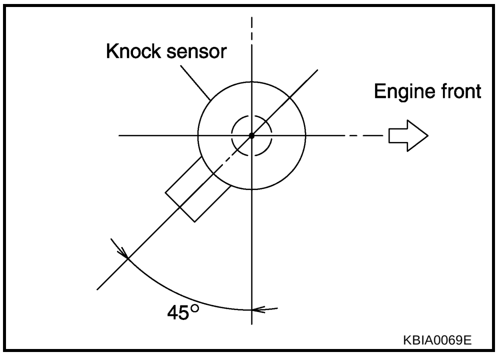


17. Install crankshaft position sensor (POS).
18. Assemble in the reverse order of disassembly after this step.

## How to Select Piston and Bearing

ABS00CJN

### DESCRIPTION

| Selection points | Selection parts | Selection items | Selection methods |
|---|---|---|---|
| Between cylinder block and crankshaft | Main bearing | Main bearing grade (bearing thickness) | Determined by match of cylinder block bearing housing grade (inner diameter of housing) and crankshaft journal grade (outer diameter of journal) |
| Between crankshaft and connecting rod | Connecting rod bearing | Connecting rod bearing grade (bearing thickness) | Combining service grades for connecting rod big end diameter and crankshaft pin outer diameter determine connecting rod bearing selection. |
| Between cylinder block and piston | Piston and piston pin assembly (piston is available together with piston pin as an assembly.) | Piston grade (piston skirt diameter) | Piston grade = cylinder bore grade (inner diameter of bore) |
| Between piston and connecting rod* | — | — | — |

*For the service parts, the grade for fitting cannot be selected between piston pin and connecting rod. (Only grade "0" is available.) The information at the shipment from the plant is described as a reference.

- The identification grade stamped on each part is the grade for the dimension measured in new condition. This grade cannot apply to reused parts.

- For reused or repaired parts, measure the dimension accurately. Determine the grade by comparing the measurement with the values of each selection table.
- For details of the measurement method of each part, the reuse standards and the selection method of the selective fitting parts, refer to the text.

## HOW TO SELECT PISTON

### When New Cylinder Block Is Used

- Check the cylinder bore grade on rear-left side of cylinder block, and select piston of the same grade.
- If there is a corrected stamp mark on cylinder block, use it as a correct reference.

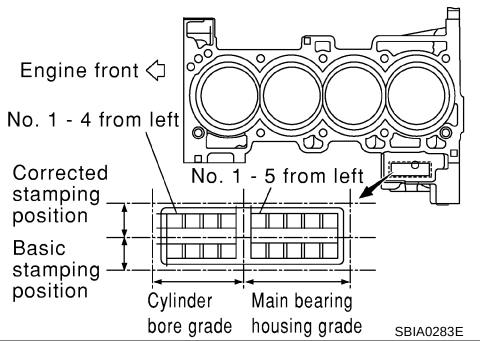


SBIA0283E

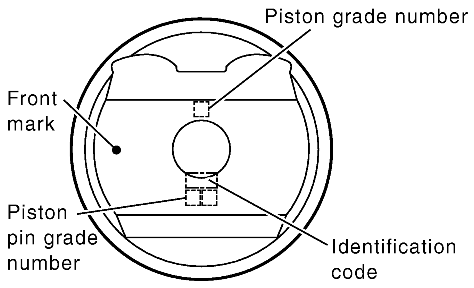


PBIC2197E

### When Cylinder Block Is Reused

1. Measure the cylinder bore inner diameter. Refer to EM-102, "Cylinder Bore Inner Diameter" .
2. Determine the bore grade by comparing the measurement with the values under the cylinder bore inner diameter of the “Piston Selection Table”.
3. Select piston of the same grade.

### Piston Selection Table

Unit: mm (in)

| Grade number (Mark) | 2 (or no mark) | 3 |
|---|---|---|
| Cylinder bore Inner diameter | 89.010 - 89.020 (3.5043 - 3.5047) | 89.020 - 89.030 (3.5047 - 3.5051) |
| Piston skirt diameter | 88.990 - 89.000 (3.5035 - 3.5039) | 89.000 - 89.010 (3.5039 - 3.5043) |

**NOTE:**

- There is no piston grade “1”.
- Piston is available together with piston pin as an assembly.
- The piston pin (piston pin hole) grade is provided only for the parts installed at the plant. For service parts, no grades can be selected. (Only grade “0” is available.)

## HOW TO SELECT CONNECTING ROD BEARING

### When New Connecting Rod and Crankshaft Are Used

1. Apply connecting rod big end diameter grade stamped on connecting rod side face to the row in the “Connecting Rod Bearing Selection Table”.

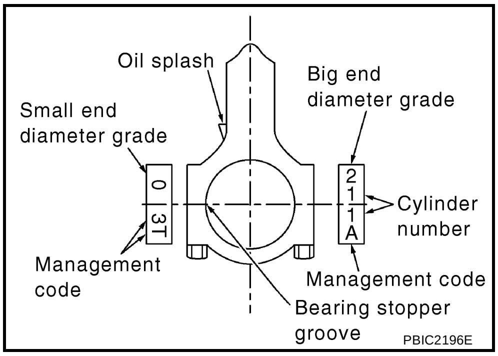


2. Apply crankshaft pin journal diameter grade stamped on crankshaft front side to the column in the “Connecting Rod Bearing Selection Table”.

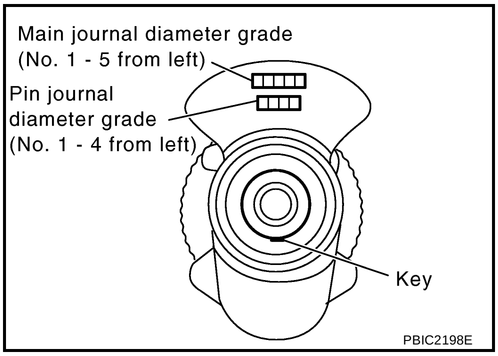


3. Read the symbol at the cross point of selected row and column in the “Connecting Rod Bearing Selection Table”.
4. Apply the symbol obtained to the “Connecting Rod Bearing Grade Table” to select connecting rod bearing.

### When Crankshaft and Connecting Rod Are Reused

1. Measure the dimensions of the connecting rod big end diameter and crankshaft pin journal diameter individually. Refer to EM-100, "CONNECTING ROD BIG END DIAMETER" and EM-104, "CRANKSHAFT PIN JOURNAL DIAMETER" .
2. Apply the measured dimension to the “Connecting Rod Bearing Selection Table”.
3. Read the symbol at the cross point of selected row and column in the “Connecting Rod Bearing Selection Table”.
4. Apply the symbol obtained to the “Connecting Rod Bearing Grade Table” to select connecting rod bearing.

## Connecting Rod Bearing Selection Table

| Crankshaft pin journal diameter \ Connecting rod big end diameter | | Mark | 0 | 1 | 2 | 3 | 4 | 5 | 6 | 7 | 8 | 9 | A | B | C |
|---|---|---|---|---|---|---|---|---|---|---|---|---|---|---|---|
| | | Inner diameter Unit: mm (in) | 48.000 - 48.001 (1.8898 - 1.8898) | 48.001 - 48.002 (1.8898 - 1.8898) | 48.002 - 48.003 (1.8898 - 1.8899) | 48.003 - 48.004 (1.8899 - 1.8899) | 48.004 - 48.005 (1.8899 - 1.8900) | 48.005 - 48.006 (1.8900 - 1.8900) | 48.006 - 48.007 (1.8900 - 1.8900) | 48.007 - 48.008 (1.8900 - 1.8901) | 48.008 - 48.009 (1.8901 - 1.8901) | 48.009 - 48.010 (1.8901 - 1.8902) | 48.010 - 48.011 (1.8902 - 1.8902) | 48.011 - 48.012 (1.8902 - 1.8902) | 48.012 - 48.013 (1.8902 - 1.8903) |
| Mark | Outer diameter Unit: mm (in) | | | | | | | | | | | | | | |
| A | 44.974 - 44.973 (1.7706 - 1.7706) | | 0 | 0 | 0 | 0 | 0 | 0 | 0 | 0 | 1 | 1 | 1 | 1 | 1 |
| B | 44.973 - 44.972 (1.7706 - 1.7705) | | 0 | 0 | 0 | 0 | 0 | 0 | 0 | 1 | 1 | 1 | 1 | 1 | 1 |
| C | 44.972 - 44.971 (1.7705 - 1.7705) | | 0 | 0 | 0 | 0 | 0 | 0 | 1 | 1 | 1 | 1 | 1 | 1 | 1 |
| D | 44.971 - 44.970 (1.7705 - 1.7705) | | 0 | 0 | 0 | 0 | 0 | 1 | 1 | 1 | 1 | 1 | 1 | 1 | 1 |
| E | 44.970 - 44.969 (1.7705 - 1.7704) | | 0 | 0 | 0 | 0 | 1 | 1 | 1 | 1 | 1 | 1 | 1 | 1 | 2 |
| F | 44.969 - 44.968 (1.7704 - 1.7704) | | 0 | 0 | 0 | 1 | 1 | 1 | 1 | 1 | 1 | 1 | 1 | 2 | 2 |
| G | 44.968 - 44.967 (1.7704 - 1.7704) | | 0 | 0 | 1 | 1 | 1 | 1 | 1 | 1 | 1 | 1 | 2 | 2 | 2 |
| H | 44.967 - 44.966 (1.7704 - 1.7703) | | 0 | 1 | 1 | 1 | 1 | 1 | 1 | 1 | 1 | 2 | 2 | 2 | 2 |
| J | 44.966 - 44.965 (1.7703 - 1.7703) | | 1 | 1 | 1 | 1 | 1 | 1 | 1 | 1 | 2 | 2 | 2 | 2 | 2 |
| K | 44.965 - 44.964 (1.7703 - 1.7702) | | 1 | 1 | 1 | 1 | 1 | 1 | 1 | 2 | 2 | 2 | 2 | 2 | 2 |
| L | 44.964 - 44.963 (1.7702 - 1.7702) | | 1 | 1 | 1 | 1 | 1 | 1 | 2 | 2 | 2 | 2 | 2 | 2 | 2 |
| M | 44.963 - 44.962 (1.7702 - 1.7702) | | 1 | 1 | 1 | 1 | 1 | 2 | 2 | 2 | 2 | 2 | 2 | 2 | 2 |
| N | 44.962 - 44.961 (1.7702 - 1.7701) | | 1 | 1 | 1 | 1 | 2 | 2 | 2 | 2 | 2 | 2 | 2 | 2 | 3 |
| P | 44.961 - 44.960 (1.7701 - 1.7701) | | 1 | 1 | 1 | 2 | 2 | 2 | 2 | 2 | 2 | 2 | 2 | 3 | 3 |
| R | 44.960 - 44.959 (1.7701 - 1.7700) | | 1 | 1 | 2 | 2 | 2 | 2 | 2 | 2 | 2 | 2 | 3 | 3 | 3 |
| S | 44.959 - 44.958 (1.7700 - 1.7700) | | 1 | 2 | 2 | 2 | 2 | 2 | 2 | 2 | 2 | 3 | 3 | 3 | 3 |
| T | 44.958 - 44.957 (1.7700 - 1.7700) | | 2 | 2 | 2 | 2 | 2 | 2 | 2 | 2 | 3 | 3 | 3 | 3 | 3 |
| U | 44.957 - 44.956 (1.7700 - 1.7699) | | 2 | 2 | 2 | 2 | 2 | 2 | 2 | 3 | 3 | 3 | 3 | 3 | 3 |

PBIC2199E

## Connecting Rod Bearing Grade Table

Unit: mm (in)

| Grade number | 0 | 1 | 2 | 3 |
|---|---|---|---|---|
| Thickness | 1.495 - 1.499 (0.0589 - 0.0590) | 1.499 - 1.503 (0.0590 - 0.0592) | 1.503 - 1.507 (0.0592 - 0.0593) | 1.507 - 1.511 (0.0593 - 0.0595) |
| Identification color | Black | Brown | Green | Yellow |

## Undersize Bearings Usage Guide

- When the specified connecting rod bearing oil clearance is not obtained with standard size connecting rod bearings, use undersize (US) bearings.
- When using undersize (US) bearing, measure the connecting rod bearing inner diameter with bearing installed, and grind the crankshaft pin so that the connecting rod bearing oil clearance satisfies the standard.

**CAUTION:**
**In grinding crankshaft pin to use undersize bearings, keep the fillet R [1.5 - 1.7 mm (0.059 - 0.067 in)].**

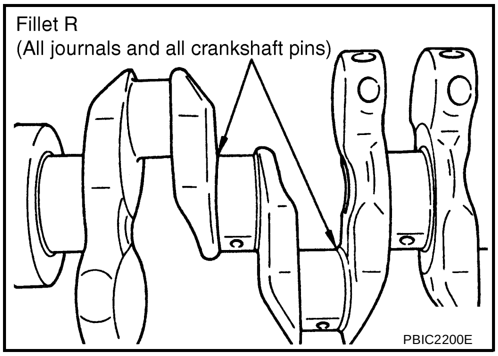


**Bearing undersize table**

Unit: mm (in)

| Size | Thickness |
|---|---|
| US 0.25 (0.0098) | 1.624 - 1.632 (0.0639 - 0.0643) |

## HOW TO SELECT MAIN BEARING

### When New Cylinder Block and Crankshaft Are Used

1. “Main Bearing Selection Table” rows correspond to main bearing housing grade on rear-left side of cylinder block.
   - If there is a corrected stamp mark on cylinder block, use it as a correct reference.

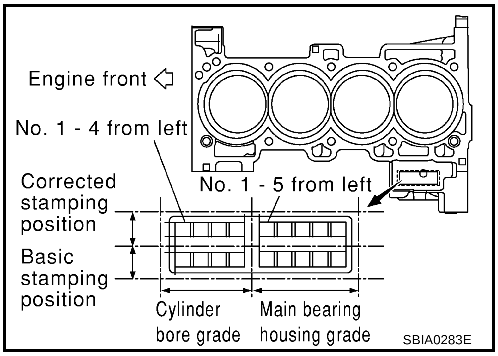


2. Apply main journal diameter grade stamped on crankshaft front side to column in the “Main Bearing Selection Table”.

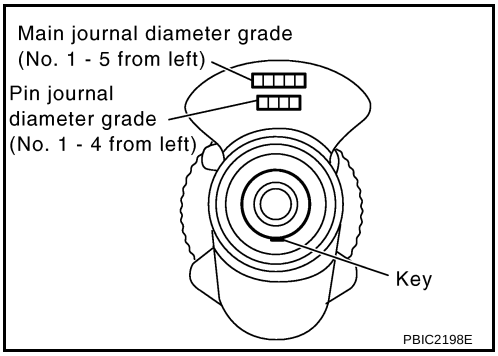


3. Read the symbol at the cross point of selected row and column in the “Main Bearing Selection Table”.
   **CAUTION:**
   **There are two main bearing selection tables. One is for odd-numbered journals (No. 1, 3 and 5) and the other is for even-numbered journals (No. 2 and 4). Make certain to use the appropriate table. This is due to differences in the specified clearances.**
4. Apply the symbol obtained to the “Main Bearing Grade Table” to select main bearing.
   **NOTE:**
   Service part is available as a set of both upper and lower.

### When Cylinder Block and Crankshaft Are Reused

1. Measure the dimensions of the cylinder block main bearing housing inner diameter and crankshaft main journal diameter individually. Refer to EM-102, "MAIN BEARING HOUSING INNER DIAMETER" and EM-103, "CRANKSHAFT MAIN JOURNAL DIAMETER" .
2. Apply the measured dimension to the “Main Bearing Selection Table”.

A

EM

3. Read the symbol at the cross point of selected row and column in the “Main Bearing Selection Table”.

   **CAUTION:**

   **There are two main bearing selection tables. One is for odd-numbered journals (No. 1, 3 and 5) and the other is for even-numbered journals (No. 2 and 4). Make certain to use the appropriate table. This is due to differences in the specified clearances.**

4. Apply the symbol obtained to the “Main Bearing Grade Table” to select main bearing.

   **NOTE:**

   Service part is available as a set of both upper and lower.

## Main Bearing Selection Table (No. 1, 3 and 5 Journals)

| Cylinder block main bearing housing inner diameter / Crankshaft main journal diameter | Mark | A | B | C | D | E | F | G | H | J | K | L | M | N | P | R | S | T | U | V | W | X | Y | 4 | 7 |
|---|---|---|---|---|---|---|---|---|---|---|---|---|---|---|---|---|---|---|---|---|---|---|---|---|---|
| Mark | Outer diameter Unit: mm (in) / Inner diameter Unit: mm (in) | 58.944 - 58.945 (2.3206 - 2.3207) | 58.945 - 58.946 (2.3207 - 2.3207) | 58.946 - 58.947 (2.3207 - 2.3207) | 58.947 - 58.948 (2.3207 - 2.3208) | 58.948 - 58.949 (2.3208 - 2.3208) | 58.949 - 58.950 (2.3208 - 2.3209) | 58.950 - 58.951 (2.3209 - 2.3209) | 58.951 - 58.952 (2.3209 - 2.3209) | 58.952 - 58.953 (2.3209 - 2.3210) | 58.953 - 58.954 (2.3210 - 2.3210) | 58.954 - 58.955 (2.3210 - 2.3211) | 58.955 - 58.956 (2.3211 - 2.3211) | 58.956 - 58.957 (2.3211 - 2.3211) | 58.957 - 58.958 (2.3211 - 2.3212) | 58.958 - 58.959 (2.3212 - 2.3212) | 58.959 - 58.960 (2.3212 - 2.3213) | 58.960 - 58.961 (2.3213 - 2.3213) | 58.961 - 58.962 (2.3213 - 2.3213) | 58.962 - 58.963 (2.3213 - 2.3214) | 58.963 - 58.964 (2.3214 - 2.3214) | 58.964 - 58.965 (2.3214 - 2.3215) | 58.965 - 58.966 (2.3215 - 2.3215) | 58.966 - 58.967 (2.3215 - 2.3215) | 58.967 - 58.968 (2.3215 - 2.3216) |
| A | 54.979 - 54.978 (2.1645 - 2.1645) | 0 | 0 | 01 | 01 | 01 | 1 | 1 | 1 | 12 | 12 | 12 | 2 | 2 | 2 | 23 | 23 | 23 | 3 | 3 | 3 | 34 | 34 | 34 | 4 |
| B | 54.978 - 54.977 (2.1645 - 2.1644) | 0 | 01 | 01 | 01 | 1 | 1 | 1 | 12 | 12 | 12 | 2 | 2 | 2 | 23 | 23 | 23 | 3 | 3 | 3 | 34 | 34 | 34 | 4 | 4 |
| C | 54.977 - 54.976 (2.1644 - 2.1644) | 01 | 01 | 01 | 1 | 1 | 1 | 12 | 12 | 12 | 2 | 2 | 2 | 23 | 23 | 23 | 3 | 3 | 3 | 34 | 34 | 34 | 4 | 4 | 4 |
| D | 54.976 - 54.975 (2.1644 - 2.1644) | 01 | 01 | 1 | 1 | 1 | 12 | 12 | 12 | 2 | 2 | 2 | 23 | 23 | 23 | 3 | 3 | 3 | 34 | 34 | 34 | 4 | 4 | 4 | 45 |
| E | 54.975 - 54.974 (2.1644 - 2.1643) | 01 | 1 | 1 | 1 | 12 | 12 | 12 | 2 | 2 | 2 | 23 | 23 | 23 | 3 | 3 | 3 | 34 | 34 | 34 | 4 | 4 | 4 | 45 | 45 |
| F | 54.974 - 54.973 (2.1643 - 2.1643) | 1 | 1 | 1 | 12 | 12 | 12 | 2 | 2 | 2 | 23 | 23 | 23 | 3 | 3 | 3 | 34 | 34 | 34 | 4 | 4 | 4 | 45 | 45 | 45 |
| G | 54.973 - 54.972 (2.1643 - 2.1642) | 1 | 1 | 12 | 12 | 12 | 2 | 2 | 2 | 23 | 23 | 23 | 3 | 3 | 3 | 34 | 34 | 34 | 4 | 4 | 4 | 45 | 45 | 45 | 5 |
| H | 54.972 - 54.971 (2.1642 - 2.1642) | 1 | 12 | 12 | 12 | 2 | 2 | 2 | 23 | 23 | 23 | 3 | 3 | 3 | 34 | 34 | 34 | 4 | 4 | 4 | 45 | 45 | 45 | 5 | 5 |
| J | 54.971 - 54.970 (2.1642 - 2.1642) | 12 | 12 | 12 | 2 | 2 | 2 | 23 | 23 | 23 | 3 | 3 | 3 | 34 | 34 | 34 | 4 | 4 | 4 | 45 | 45 | 45 | 5 | 5 | 5 |
| K | 54.970 - 54.969 (2.1642 - 2.1641) | 12 | 12 | 2 | 2 | 2 | 23 | 23 | 23 | 3 | 3 | 3 | 34 | 34 | 34 | 4 | 4 | 4 | 45 | 45 | 45 | 5 | 5 | 5 | 56 |
| L | 54.969 - 54.968 (2.1641 - 2.1641) | 12 | 2 | 2 | 2 | 23 | 23 | 23 | 3 | 3 | 3 | 34 | 34 | 34 | 4 | 4 | 4 | 45 | 45 | 45 | 5 | 5 | 5 | 56 | 56 |
| M | 54.968 - 54.967 (2.1641 - 2.1641) | 2 | 2 | 2 | 23 | 23 | 23 | 3 | 3 | 3 | 34 | 34 | 34 | 4 | 4 | 4 | 45 | 45 | 45 | 5 | 5 | 5 | 56 | 56 | 56 |
| N | 54.967 - 54.966 (2.1641 - 2.1640) | 2 | 2 | 23 | 23 | 23 | 3 | 3 | 3 | 34 | 34 | 34 | 4 | 4 | 4 | 45 | 45 | 45 | 5 | 5 | 5 | 56 | 56 | 56 | 6 |
| P | 54.966 - 54.965 (2.1640 - 2.1640) | 2 | 23 | 23 | 23 | 3 | 3 | 3 | 34 | 34 | 34 | 4 | 4 | 4 | 45 | 45 | 45 | 5 | 5 | 5 | 56 | 56 | 56 | 6 | 6 |
| R | 54.965 - 54.964 (2.1640 - 2.1639) | 23 | 23 | 23 | 3 | 3 | 3 | 34 | 34 | 34 | 4 | 4 | 4 | 45 | 45 | 45 | 5 | 5 | 5 | 56 | 56 | 56 | 6 | 6 | 6 |
| S | 54.964 - 54.963 (2.1639 - 2.1639) | 23 | 23 | 3 | 3 | 3 | 34 | 34 | 34 | 4 | 4 | 4 | 45 | 45 | 45 | 5 | 5 | 5 | 56 | 56 | 56 | 6 | 6 | 6 | 67 |
| T | 54.963 - 54.962 (2.1639 - 2.1639) | 23 | 3 | 3 | 3 | 34 | 34 | 34 | 4 | 4 | 4 | 45 | 45 | 45 | 5 | 5 | 5 | 56 | 56 | 56 | 6 | 6 | 6 | 67 | 67 |
| U | 54.962 - 54.961 (2.1639 - 2.1638) | 3 | 3 | 3 | 34 | 34 | 34 | 4 | 4 | 4 | 45 | 45 | 45 | 5 | 5 | 5 | 56 | 56 | 56 | 6 | 6 | 6 | 67 | 67 | 67 |
| V | 54.961 - 54.960 (2.1638 - 2.1638) | 3 | 3 | 34 | 34 | 34 | 4 | 4 | 4 | 45 | 45 | 45 | 5 | 5 | 5 | 56 | 56 | 56 | 6 | 6 | 6 | 67 | 67 | 67 | 7 |
| W | 54.960 - 54.959 (2.1638 - 2.1637) | 3 | 34 | 34 | 34 | 4 | 4 | 4 | 45 | 45 | 45 | 5 | 5 | 5 | 56 | 56 | 56 | 6 | 6 | 6 | 67 | 67 | 67 | 7 | 7 |
| X | 54.959 - 54.958 (2.1637 - 2.1637) | 34 | 34 | 34 | 4 | 4 | 4 | 45 | 45 | 45 | 5 | 5 | 5 | 56 | 56 | 56 | 6 | 6 | 6 | 67 | 67 | 67 | 7 | 7 | 7 |
| Y | 54.958 - 54.957 (2.1637 - 2.1637) | 34 | 34 | 4 | 4 | 4 | 45 | 45 | 45 | 5 | 5 | 5 | 56 | 56 | 56 | 6 | 6 | 6 | 67 | 67 | 67 | 7 | 7 | 7 | 7 |
| 4 | 54.957 - 54.956 (2.1637 - 2.1636) | 34 | 4 | 4 | 4 | 45 | 45 | 45 | 5 | 5 | 5 | 56 | 56 | 56 | 6 | 6 | 6 | 67 | 67 | 67 | 7 | 7 | 7 | 7 | 7 |
| 7 | 54.956 - 54.955 (2.1636 - 2.1636) | 4 | 4 | 4 | 45 | 45 | 45 | 5 | 5 | 5 | 56 | 56 | 56 | 6 | 6 | 6 | 67 | 67 | 67 | 7 | 7 | 7 | 7 | 7 | 7 |

PBIC2201E

C D E F G H I J K L M

## Main Bearing Selection Table (No. 2 and 4 Journals)

| Crankshaft main journal diameter \ Cylinder block main bearing housing inner diameter | Mark | A | B | C | D | E | F | G | H | J | K | L | M | N | P | R | S | T | U | V | W | X | Y | 4 | 7 |
|---|---|---|---|---|---|---|---|---|---|---|---|---|---|---|---|---|---|---|---|---|---|---|---|---|---|
| | Inner diameter Unit: mm (in) | 58.944 - 58.945 (2.3206 - 2.3207) | 58.945 - 58.946 (2.3207 - 2.3207) | 58.946 - 58.947 (2.3207 - 2.3207) | 58.947 - 58.948 (2.3207 - 2.3208) | 58.948 - 58.949 (2.3208 - 2.3208) | 58.949 - 58.950 (2.3208 - 2.3209) | 58.950 - 58.951 (2.3209 - 2.3209) | 58.951 - 58.952 (2.3209 - 2.3209) | 58.952 - 58.953 (2.3209 - 2.3210) | 58.953 - 58.954 (2.3210 - 2.3210) | 58.954 - 58.955 (2.3210 - 2.3211) | 58.955 - 58.956 (2.3211 - 2.3211) | 58.956 - 58.957 (2.3211 - 2.3211) | 58.957 - 58.958 (2.3211 - 2.3212) | 58.958 - 58.959 (2.3212 - 2.3212) | 58.959 - 58.960 (2.3212 - 2.3213) | 58.960 - 58.961 (2.3213 - 2.3213) | 58.961 - 58.962 (2.3213 - 2.3213) | 58.962 - 58.963 (2.3213 - 2.3214) | 58.963 - 58.964 (2.3214 - 2.3214) | 58.964 - 58.965 (2.3214 - 2.3215) | 58.965 - 58.966 (2.3215 - 2.3215) | 58.966 - 58.967 (2.3215 - 2.3215) | 58.967 - 58.968 (2.3215 - 2.3216) |
| Mark | Outer diameter Unit: mm (in) | | | | | | | | | | | | | | | | | | | | | | | | |
| A | 54.979 - 54.978 (2.1645 - 2.1645) | 0 | 0 | 0 | 0 | 0 | 0 | 0 | 0 | 01 | 01 | 01 | 1 | 1 | 1 | 12 | 12 | 12 | 2 | 2 | 2 | 23 | 23 | 23 | 3 |
| B | 54.978 - 54.977 (2.1645 - 2.1644) | 0 | 0 | 0 | 0 | 0 | 0 | 0 | 01 | 01 | 01 | 1 | 1 | 1 | 12 | 12 | 12 | 2 | 2 | 2 | 23 | 23 | 23 | 3 | 3 |
| C | 54.977 - 54.976 (2.1644 - 2.1644) | 0 | 0 | 0 | 0 | 0 | 0 | 01 | 01 | 01 | 1 | 1 | 1 | 12 | 12 | 12 | 2 | 2 | 2 | 23 | 23 | 23 | 3 | 3 | 3 |
| D | 54.976 - 54.975 (2.1644 - 2.1644) | 0 | 0 | 0 | 0 | 0 | 01 | 01 | 01 | 1 | 1 | 1 | 12 | 12 | 12 | 2 | 2 | 2 | 23 | 23 | 23 | 3 | 3 | 3 | 34 |
| E | 54.975 - 54.974 (2.1644 - 2.1643) | 0 | 0 | 0 | 0 | 01 | 01 | 01 | 1 | 1 | 1 | 12 | 12 | 12 | 2 | 2 | 2 | 23 | 23 | 23 | 3 | 3 | 3 | 34 | 34 |
| F | 54.974 - 54.973 (2.1643 - 2.1643) | 0 | 0 | 0 | 01 | 01 | 01 | 1 | 1 | 1 | 12 | 12 | 12 | 2 | 2 | 2 | 23 | 23 | 23 | 3 | 3 | 3 | 34 | 34 | 34 |
| G | 54.973 - 54.972 (2.1643 - 2.1642) | 0 | 0 | 01 | 01 | 01 | 1 | 1 | 1 | 12 | 12 | 12 | 2 | 2 | 2 | 23 | 23 | 23 | 3 | 3 | 3 | 34 | 34 | 34 | 4 |
| H | 54.972 - 54.971 (2.1642 - 2.1642) | 0 | 01 | 01 | 01 | 1 | 1 | 1 | 12 | 12 | 12 | 2 | 2 | 2 | 23 | 23 | 23 | 3 | 3 | 3 | 34 | 34 | 34 | 4 | 4 |
| J | 54.971 - 54.970 (2.1642 - 2.1642) | 01 | 01 | 01 | 1 | 1 | 1 | 12 | 12 | 12 | 2 | 2 | 2 | 23 | 23 | 23 | 3 | 3 | 3 | 34 | 34 | 34 | 4 | 4 | 4 |
| K | 54.970 - 54.969 (2.1642 - 2.1641) | 01 | 01 | 1 | 1 | 1 | 12 | 12 | 12 | 2 | 2 | 2 | 23 | 23 | 23 | 3 | 3 | 3 | 34 | 34 | 34 | 4 | 4 | 4 | 45 |
| L | 54.969 - 54.968 (2.1641 - 2.1641) | 01 | 1 | 1 | 1 | 12 | 12 | 12 | 2 | 2 | 2 | 23 | 23 | 23 | 3 | 3 | 3 | 34 | 34 | 34 | 4 | 4 | 4 | 45 | 45 |
| M | 54.968 - 54.967 (2.1641 - 2.1641) | 1 | 1 | 1 | 12 | 12 | 12 | 2 | 2 | 2 | 23 | 23 | 23 | 3 | 3 | 3 | 34 | 34 | 34 | 4 | 4 | 4 | 45 | 45 | 45 |
| N | 54.967 - 54.966 (2.1641 - 2.1640) | 1 | 1 | 12 | 12 | 12 | 2 | 2 | 2 | 23 | 23 | 23 | 3 | 3 | 3 | 34 | 34 | 34 | 4 | 4 | 4 | 45 | 45 | 45 | 5 |
| P | 54.966 - 54.965 (2.1640 - 2.1640) | 1 | 12 | 12 | 12 | 2 | 2 | 2 | 23 | 23 | 23 | 3 | 3 | 3 | 34 | 34 | 34 | 4 | 4 | 4 | 45 | 45 | 45 | 5 | 5 |
| R | 54.965 - 54.964 (2.1640 - 2.1639) | 12 | 12 | 12 | 2 | 2 | 2 | 23 | 23 | 23 | 3 | 3 | 3 | 34 | 34 | 34 | 4 | 4 | 4 | 45 | 45 | 45 | 5 | 5 | 5 |
| S | 54.964 - 54.963 (2.1639 - 2.1639) | 12 | 12 | 2 | 2 | 2 | 23 | 23 | 23 | 3 | 3 | 3 | 34 | 34 | 34 | 4 | 4 | 4 | 45 | 45 | 45 | 5 | 5 | 5 | 56 |
| T | 54.963 - 54.962 (2.1639 - 2.1639) | 12 | 2 | 2 | 2 | 23 | 23 | 23 | 3 | 3 | 3 | 34 | 34 | 34 | 4 | 4 | 4 | 45 | 45 | 45 | 5 | 5 | 5 | 56 | 56 |
| U | 54.962 - 54.961 (2.1639 - 2.1638) | 2 | 2 | 2 | 23 | 23 | 23 | 3 | 3 | 3 | 34 | 34 | 34 | 4 | 4 | 4 | 45 | 45 | 45 | 5 | 5 | 5 | 56 | 56 | 56 |
| V | 54.961 - 54.960 (2.1638 - 2.1638) | 2 | 2 | 23 | 23 | 23 | 3 | 3 | 3 | 34 | 34 | 34 | 4 | 4 | 4 | 45 | 45 | 45 | 5 | 5 | 5 | 56 | 56 | 56 | 6 |
| W | 54.960 - 54.959 (2.1638 - 2.1637) | 2 | 23 | 23 | 23 | 3 | 3 | 3 | 34 | 34 | 34 | 4 | 4 | 4 | 45 | 45 | 45 | 5 | 5 | 5 | 56 | 56 | 56 | 6 | 6 |
| X | 54.959 - 54.958 (2.1637 - 2.1637) | 23 | 23 | 23 | 3 | 3 | 3 | 34 | 34 | 34 | 4 | 4 | 4 | 45 | 45 | 45 | 5 | 5 | 5 | 56 | 56 | 56 | 6 | 6 | 6 |
| Y | 54.958 - 54.957 (2.1637 - 2.1637) | 23 | 23 | 3 | 3 | 3 | 34 | 34 | 34 | 4 | 4 | 4 | 45 | 45 | 45 | 5 | 5 | 5 | 56 | 56 | 56 | 6 | 6 | 6 | 67 |
| 4 | 54.957 - 54.956 (2.1637 - 2.1636) | 23 | 3 | 3 | 3 | 34 | 34 | 34 | 4 | 4 | 4 | 45 | 45 | 45 | 5 | 5 | 5 | 56 | 56 | 56 | 6 | 6 | 6 | 67 | 67 |
| 7 | 54.956 - 54.955 (2.1636 - 2.1636) | 3 | 3 | 3 | 34 | 34 | 34 | 4 | 4 | 4 | 45 | 45 | 45 | 5 | 5 | 5 | 56 | 56 | 56 | 6 | 6 | 6 | 67 | 67 | 67 |

PBIC2202E

## Main Bearing Grade Table (All Journals)

Unit: mm (in)

| Grade number | | Thickness | Identification color | Remarks |
|---|---|---|---|---|
| 0 | | 1.973 - 1.976 (0.0777 - 0.0778) | Black | Grade and color are the same for upper and lower bearings. |
| 1 | | 1.976 - 1.979 (0.0778 - 0.0779) | Brown | |
| 2 | | 1.979 - 1.982 (0.0779- 0.0780) | Green | |
| 3 | | 1.982 - 1.985 (0.0780 - 0.0781) | Yellow | |
| 4 | | 1.985 - 1.988 (0.0781 - 0.0783) | Blue | |
| 5 | | 1.988 - 1.991 (0.0783 - 0.0784) | Pink | |
| 6 | | 1.991 - 1.994 (0.0784 - 0.0785) | Purple | |
| 7 | | 1.994 - 1.997 (0.0785 - 0.0786) | White | |
| 01 | UPR | 1.973 - 1.976 (0.0777 - 0.0778) | Black | Grade and color are different for upper and lower bearings. |
| | LWR | 1.976 - 1.979 (0.0778 - 0.0779) | Brown | |
| 12 | UPR | 1.976 - 1.979 (0.0778 - 0.0779) | Brown | |
| | LWR | 1.979 - 1.982 (0.0779 - 0.0780) | Green | |
| 23 | UPR | 1.979 - 1.982 (0.0779- 0.0780) | Green | |
| | LWR | 1.982 - 1.985 (0.0780 - 0.0781) | Yellow | |
| 34 | UPR | 1.982 - 1.985 (0.0780 - 0.0781) | Yellow | |
| | LWR | 1.985 - 1.988 (0.0781 - 0.0783) | Blue | |
| 45 | UPR | 1.985 - 1.988 (0.0781 - 0.0783) | Blue | |
| | LWR | 1.988 - 1.991 (0.0783 - 0.0784) | Pink | |
| 56 | UPR | 1.988 - 1.991 (0.0783 - 0.0784) | Pink | |
| | LWR | 1.991 - 1.994 (0.0784 - 0.0785) | Purple | |
| 67 | UPR | 1.991 - 1.994 (0.0784 - 0.0785) | Purple | |
| | LWR | 1.994 - 1.997 (0.0785 - 0.0786) | White | |

## Use Undersize Bearing Usage Guide

- When the specified main bearing oil clearance is not obtained with standard size main bearings, use undersize (US) bearing.
- When using undersize (US) bearing, measure the main bearing inner diameter with bearing installed, and grind main journal so that the main bearing oil clearance satisfies the standard.

**CAUTION:**

**In grinding crankshaft main journal to use undersize bearings, keep fillet R [1.5 - 1.7 mm (0.059 - 0.067 in)].**

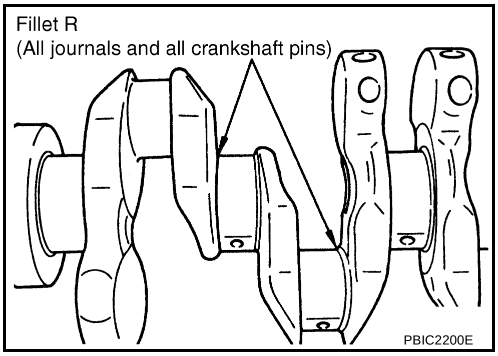


### Bearing undersize table

Unit: mm (in)

| Size | Thickness |
|---|---|
| US 0.25 (0.0098) | 2.106 - 2.114 (0.0829 - 0.0832) |

# Inspection After Disassembly

ABS00CJO

## CRANKSHAFT END PLAY

- Measure the clearance between thrust bearings and crankshaft arm when crankshaft is moved fully forward or backward with a dial indicator.

**Standard : 0.10 - 0.26 mm (0.0039 - 0.0102 in)**

**Limit : 0.30 mm (0.0118 in)**

- If the measured value exceeds the limit, replace thrust bearings, and measure again. If it still exceeds the limit, replace crankshaft also.

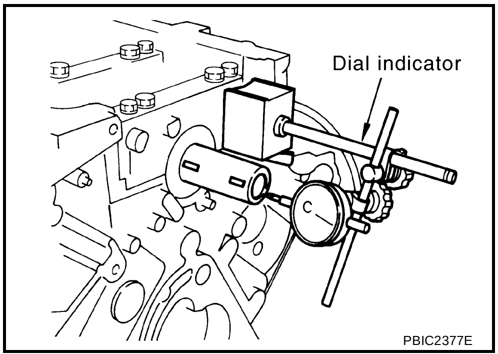


PBIC2377E

## CONNECTING ROD SIDE CLEARANCE

- Measure the side clearance between connecting rod and crankshaft arm with a feeler gauge.

**Standard : 0.20 - 0.35 mm (0.0079 - 0.0138 in)**

**Limit : 0.50 mm (0.0197 in)**

- If the measured value exceeds the limit, replace connecting rod, and measure again. If it still exceeds the limit, replace crankshaft also.

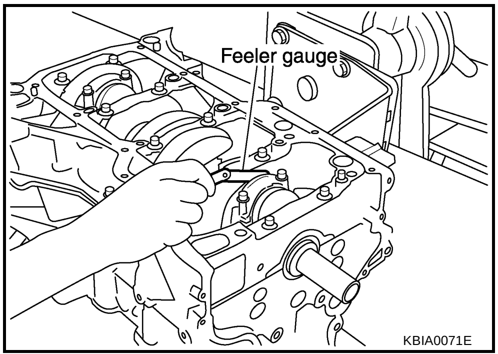


KBIA0071E

## PISTON TO PISTON PIN OIL CLEARANCE

### Piston Pin Hole Diameter

Measure the inner diameter of piston pin hole with an inside micrometer.

**Standard: 19.993 - 20.005 mm (0.7871 - 0.7876 in)**

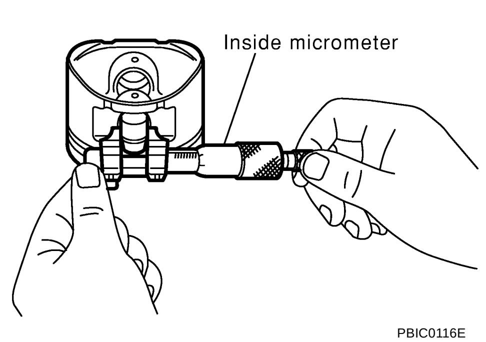


PBIC0116E

### Piston Pin Outer Diameter

Measure the outer diameter of piston pin with a micrometer.

**Standard: 19.989 - 20.001 mm (0.7870 - 0.7874 in)**

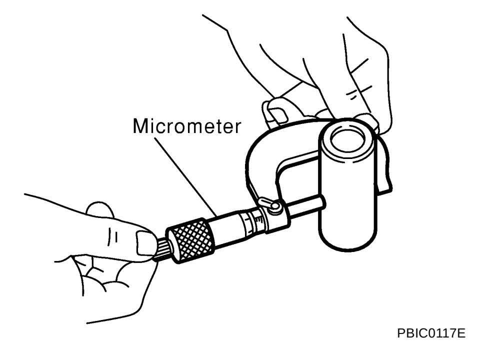


PBIC0117E

### Piston to Piston Pin Oil Clearance

(Piston to piston pin oil clearance) = (Piston pin hole diameter) – (Piston pin outer diameter)

**Standard: 0.002 - 0.006 mm (0.0001 - 0.0002 in)**

- If oil clearance is out of the standard, replace piston and piston pin assembly.

- When replacing piston and piston pin assembly, refer to EM-102, "PISTON TO CYLINDER BORE CLEARANCE" .

**NOTE:**

- Piston is available together with piston pin as assembly.
- Piston pin (piston pin hole) grade is provided only for the parts installed at the plant. For service parts, no grades can be selected. (Only grade “0” is available.)

## PISTON RING SIDE CLEARANCE

- Measure the side clearance of piston ring and piston ring groove with a feeler gauge.

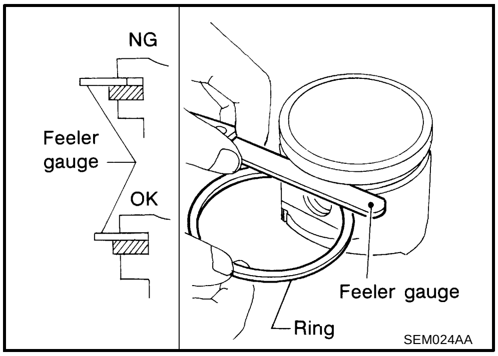


**Standard:**

| | |
|---|---|
| **Top ring** | **: 0.045 - 0.080 mm (0.0018 - 0.0031 in)** |
| **2nd ring** | **: 0.030 - 0.070 mm (0.0012 - 0.0028 in)** |
| **Oil ring** | **: 0.065 - 0.135 mm (0.0026 - 0.0053 in)** |

**Limit:**

| | |
|---|---|
| **Top ring** | **: 0.11 mm (0.0043 in)** |
| **2nd ring** | **: 0.10 mm (0.0039 in)** |

- If the measured value exceeds the limit, replace piston ring, and measure again. If it still exceeds the limit, replace piston also.

## PISTON RING END GAP

- Make sure that cylinder bore inner diameter is within the specification. Refer to EM-102, "Cylinder Bore Inner Diameter" .
- Lubricate with new engine oil to piston and piston ring, and then insert piston ring until middle of cylinder with piston, and measure piston ring end gap with a feeler gauge.

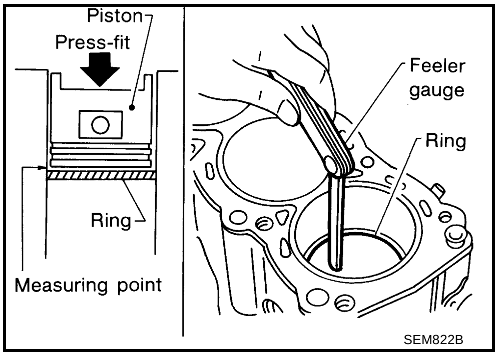


**Standard:**

| | |
|---|---|
| **Top ring** | **: 0.21 - 0.31 mm (0.0083 - 0.0122 in)** |
| **2nd ring** | **: 0.32 - 0.47 mm (0.0126 - 0.0185 in)** |
| **Oil ring (rail ring)** | **: 0.20 - 0.60 mm (0.0079 - 0.0236 in)** |

**Limit:**

| | |
|---|---|
| **Top ring** | **: 0.54 mm (0.0213 in)** |
| **2nd ring** | **: 0.67 mm (0.0264 in)** |
| **Oil ring (rail ring)** | **: 0.95 mm (0.0374 in)** |

- If the measured value exceeds the limit, replace piston ring, and measure again. If it still exceeds the limit, re-bore cylinder inner wall and use oversized piston and piston rings.

## CONNECTING ROD BEND AND TORSION

- Check with a connecting rod aligner.

  **Bend:**

  **Limit: 0.15 mm (0.0059 in) per 100 mm (3.94 in) length**

  **Torsion:**

  **Limit: 0.30 mm (0.0118 in) per 100 mm (3.94 in) length**

- If it exceeds the limit, replace connecting rod assembly.

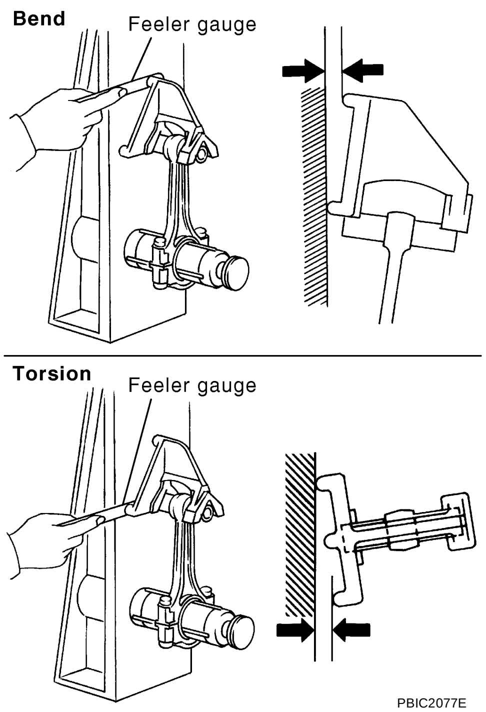

PBIC2077E

## CONNECTING ROD BIG END DIAMETER

- Install connecting rod cap without connecting rod bearing installed, and tightening connecting rod bolts to the specified torque. Refer to EM-85, "ASSEMBLY" for the tightening procedure.
- Measure the inner diameter of connecting rod big end with an inside micrometer.

  **Standard: 48.000 - 48.013 mm (1.8898 - 1.8903 in)**

- If out of the standard, replace connecting rod assembly.

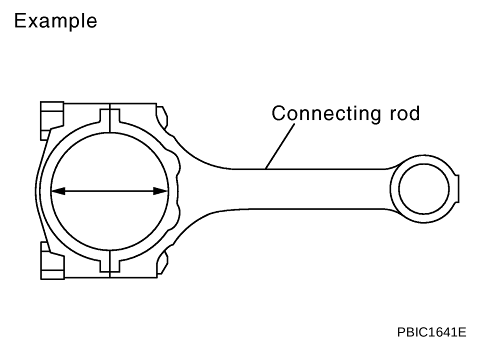

PBIC1641E

## CONNECTING ROD BUSHING OIL CLEARANCE

### Connecting Rod Bushing Inner Diameter

Measure the inner diameter of connecting rod bushing with an inside micrometer.

**Standard: 20.000 - 20.012 mm (0.7874 - 0.7879 in)**

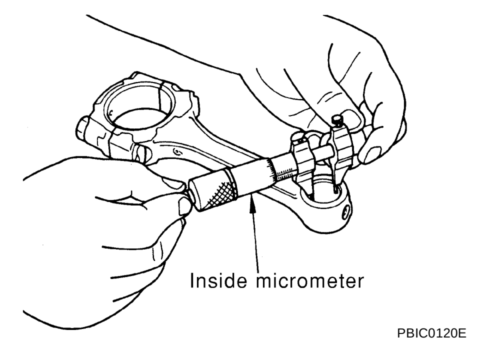

PBIC0120E

## Piston Pin Outer Diameter

Measure the outer diameter of piston pin with a micrometer.

**Standard: 19.989 - 20.001 mm (0.7870 - 0.7874 in)**

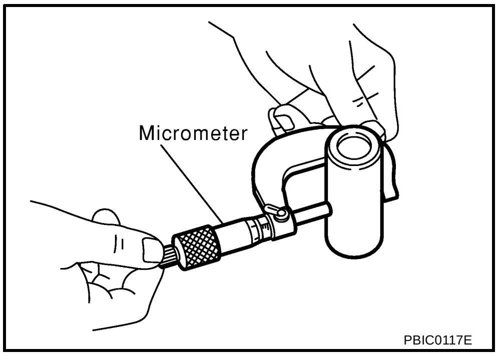


## Connecting Rod Bushing Oil Clearance

(Connecting rod bushing oil clearance) = (Connecting rod bushing inner diameter) – (Piston pin outer diameter)

**Standard: 0.005 - 0.017 mm (0.0002 - 0.0007 in)**

- If the measured value is out of the standard, replace connecting rod assembly and/or piston and piston pin assembly.
- If replacing piston and piston pin assembly, refer to EM-102, "PISTON TO CYLINDER BORE CLEARANCE" .
- If replacing connecting rod assembly, refer to EM-104, "CONNECTING ROD BEARING OIL CLEARANCE" to select connecting rod bearing.

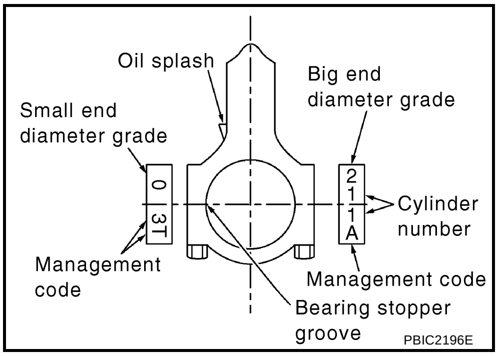


### Factory installed parts grading:

- Service parts apply only to grade “0”.

Unit: mm (in)

| Grade | 0 | 1 |
|---|---|---|
| Connecting rod bushing inner diameter* | 20.000 - 20.006 (0.7874 - 0.7876) | 20.006 - 20.012 (0.7876 - 0.7879) |
| Piston pin hole diameter | 19.993 - 19.999 (0.7871 - 0.7874) | 19.999 - 20. 005 (0.7874 - 0.7876) |
| Piston pin outer diameter | 19.989 - 19.995 (0.7870 - 0.7872) | 19.995 - 20.001 (0.7872 - 0.7874) |

* : After installing in connecting rod.

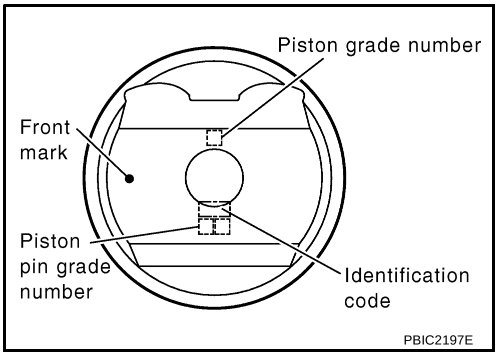


## CYLINDER BLOCK DISTORTION

- Using a scraper, remove gasket on the cylinder block surface, and also remove engine oil, scale, carbon, or other contamination.

  **CAUTION:**
  **Be careful not to allow gasket flakes to enter engine oil or engine coolant passages.**

- Measure the distortion on the cylinder block upper face at some different points in six directions with a straight edge and a feeler gauge.

  **Limit: 0.1 mm (0.004 in)**

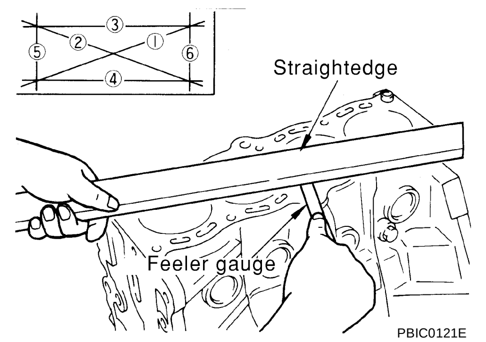

PBIC0121E

- If it exceeds the limit, replace cylinder block and lower cylinder block assembly.

  **NOTE:**
  Cylinder block cannot be replaced as a single, because it is machined together with lower cylinder block.

## MAIN BEARING HOUSING INNER DIAMETER

- Install lower cylinder block without main bearings installed, and tighten lower cylinder block mounting bolts to the specified torque. Refer to EM-85, "ASSEMBLY" for the tightening procedure.
- Measure the inner diameter of main bearing housing with a bore gauge.

  **Standard: 58.944 - 58.968 mm (2.3206 - 2.3216 in)**

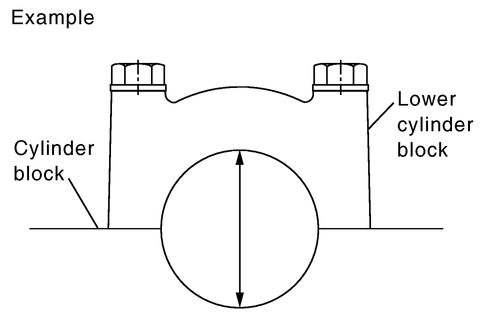

PBIC2012E

- If out of the standard, replace cylinder block and lower cylinder block assembly.

  **NOTE:**
  Cylinder block cannot be replaced as a single, because it is machined together with lower cylinder block.

## PISTON TO CYLINDER BORE CLEARANCE

### Cylinder Bore Inner Diameter

- Using a bore gauge, measure the cylinder bore for wear, out-of-round and taper at six different points on each cylinder. (“X” and “Y” directions at “A”, “B” and “C”) (“Y” is in longitudinal direction of the engine)

  **NOTE:**
  When determining cylinder bore grade, measure cylinder bore at “B” position.

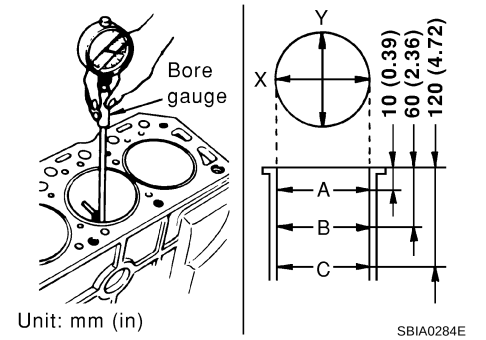

SBIA0284E

  **Standard inner diameter:**

  **89.010 - 89.030 mm (3.5043 - 3.5051 in)**

  **Wear limit:**

  **0.2 mm (0.008 in)**

  **Out-of-round (Difference between “X” and “Y”):**

  **0.015 mm (0.0006 in)**

  **Taper limit (Difference between “A” and “C”):**

  **0.01 mm (0.0004 in)**

- If the measured value exceeds the limit, or if there are scratches and/or seizure on the cylinder inner wall, hone or re-bore the cylinder inner wall.
- Oversize piston is provided. When using oversize piston, re-bore the cylinder so that the clearance of the piston to cylinder bore satisfies the standard.

  **CAUTION:**
  **When using an oversize piston, use oversize pistons for all cylinders with oversize piston rings.**

  **Oversize (OS): 0.2 mm (0.008 in)**

## Piston Skirt Diameter

Measure the outer diameter of piston skirt with a micrometer.

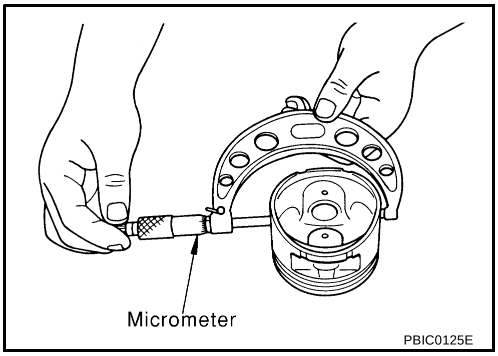


**Measure point**

**: Distance from the top 42.0 mm (1.654 in)**

**Standard**

**: 88.990 - 89.010 mm (3.5035 - 3.5043 in)**

## Piston to Cylinder Bore Clearance

Calculate by piston skirt diameter and cylinder bore inner diameter (direction “X”, position “B”).
(Clearance) = (Cylinder bore inner diameter) – (Piston skirt diameter)

**Standard : 0.010 - 0.030 mm (0.0004 - 0.0012 in)**

**Limit : 0.08 mm (0.0031 in)**

- If it exceeds the limit, replace piston and piston pin assembly. Refer to EM-91, "HOW TO SELECT PISTON" .

## Re-boring Cylinder Bore

1. Cylinder bore size is determined by adding piston to cylinder bore clearance to piston skirt diameter.

   **Re-bored size calculation: D = A + B - C**

   **where,**

   **D: Bored diameter**

   **A: Piston diameter as measured**

   **B: Piston - to - cylinder bore clearance (standard value)**

   **C: Honing allowance 0.02 mm (0.0008 in)**

2. Install lower cylinder block, and tighten mounting bolts to the specified torque. Otherwise, cylinder bores may be distorted in final assembly. Refer to EM-85, "ASSEMBLY" for the tightening procedure.
3. Cut cylinder bores.

   **NOTE:**
   - When any cylinder needs boring, all other cylinders must also be bored.
   - Do not cut too much out of cylinder bore at a time. Cut only 0.05 mm (0.0020 in) or so in diameter at a time.
4. Hone cylinders to obtain the specified piston to cylinder bore clearance.
5. Measure the finished cylinder bore for out-of-round and taper.

   **NOTE:**
   Measurement should be done after cylinder bore cools down.

## CRANKSHAFT MAIN JOURNAL DIAMETER

- Measure the outer diameter of crankshaft main journals with a micrometer.

  **Standard: 54.955 - 54.979 mm (2.1636 - 2.1645 in) dia.**

- If out of the standard, measure the main bearing oil clearance. Then use undersize bearing. Refer to EM-105, "MAIN BEARING OIL CLEARANCE" .

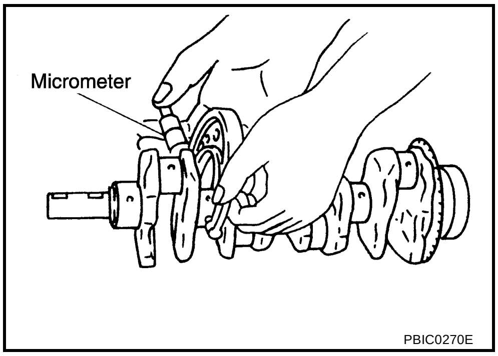

## CRANKSHAFT PIN JOURNAL DIAMETER

- Measure the outer diameter of crankshaft pin journal with a micrometer.

  **Standard: 44.956 - 44.974 mm (1.7699-1.7706 in) dia.**

- If out of the standard, measure the connecting rod bearing oil clearance. Then use undersize bearing. Refer to EM-104, "CONNECTING ROD BEARING OIL CLEARANCE" .

## OUT-OF-ROUND AND TAPER OF CRANKSHAFT

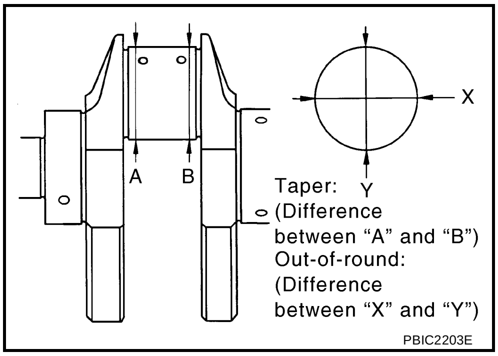


- Measure the dimensions at four different points as shown in the figure on each main journal and pin journal with a micrometer.
- Out-of-round is indicated by the difference in dimensions between “X” and “Y” at “A” and “B”.
- Taper is indicated by the difference in dimension between “A” and “B” at “X” and “Y”.

  **Limit:**

  **Out-of-round (Difference between “X” and “Y”)**

  **: 0.005 mm (0.0002 in)**

  **Taper (Difference between “A” and “B”)**

  **: 0.005 mm (0.0002 in)**

- If the measured value exceeds the limit, correct or replace crankshaft.
- If corrected, measure the bearing oil clearance of the corrected main journal and/or pin journal. Then select main bearing and/or connecting rod bearing. Refer to EM-105, "MAIN BEARING OIL CLEARANCE" and/or EM-104, "CONNECTING ROD BEARING OIL CLEARANCE" .

## CRANKSHAFT RUNOUT

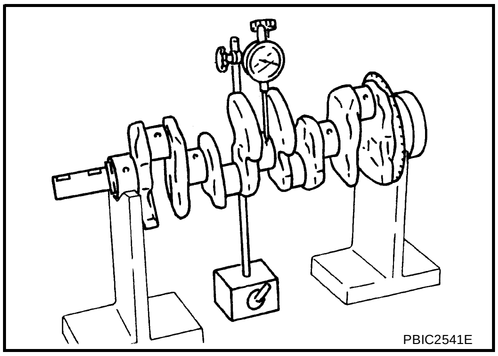


- Place a V-block on a precise flat table to support the journals on the both end of crankshaft.
- Place a dial indicator straight up on the No. 3 journal.
- While rotating crankshaft, read the movement of the pointer on the dial indicator. (Total indicator reading)

  **Limit : 0.05 mm (0.0020 in)**

- If it exceeds the limit, replace crankshaft.

## CONNECTING ROD BEARING OIL CLEARANCE

### Method by Calculation

- Install connecting rod bearings to connecting rod and cap, and tighten connecting rod bolts to the specified torque. Refer to EM-85, "ASSEMBLY" for tightening procedure.

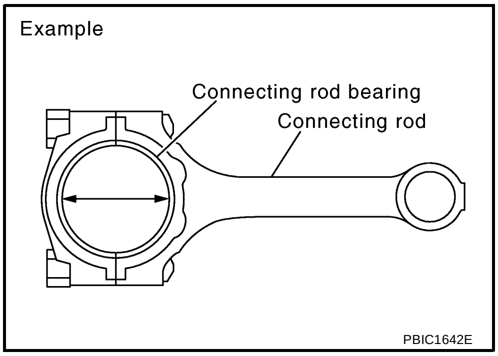


- Measure the inner diameter of connecting rod bearing with an inside micrometer.
  (Bearing oil clearance) = (Connecting rod bearing inner diameter) – (Crankshaft pin journal diameter)

  **Standard : 0.028 - 0.045 mm (0.0011 - 0.0018 in)**

  **Limit : 0.10 mm (0.0039 in)**

- If the clearance exceeds the limit, select proper connecting rod bearing according to connecting rod big end diameter and crankshaft pin journal diameter to obtain the specified bearing oil clearance. Refer to EM-92, "HOW TO SELECT CONNECTING ROD BEARING" .

### Method of Using Plastigage

- Remove engine oil and dust on crankshaft pin and the surfaces of each bearing completely.

- Cut a plastigage slightly shorter than the bearing width, and place it in crankshaft axial direction, avoiding oil holes.
- Install connecting rod bearings to connecting rod and cap, and tighten connecting rod bolts to the specified torque. Refer to EM-85, "ASSEMBLY" for the tightening procedure.

  **CAUTION:**
  **Do not rotate crankshaft.**
- Remove connecting rod cap and bearing, and using the scale on the plastigage bag, measure the plastigage width.

  **NOTE:**
  The procedure when the measured value exceeds the limit is same as that described in the “Method by Calculation”.

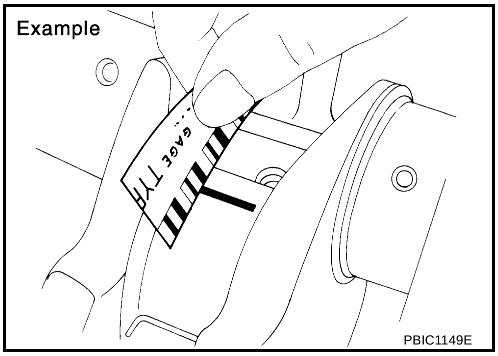

PBIC1149E

## MAIN BEARING OIL CLEARANCE

### Method by Calculation

- Install main bearings to cylinder block and lower cylinder block, and tighten lower cylinder block mounting bolts to the specified torque. Refer to EM-85, "ASSEMBLY" for the tightening procedure.
- Measure the inner diameter of main bearing with a bore gauge.

(Bearing oil clearance) = (Main bearing inner diameter) – (Crankshaft main journal diameter)

**Standard:**

**No. 1, 3 and 5 journals**

**: 0.012 - 0.022 mm (0.0005 - 0.0009 in)**

**No. 2 and 4 journals**

**: 0.018 - 0.028 mm (0.0007 - 0.0011 in)**

**Limit : 0.1 mm (0.004 in)**

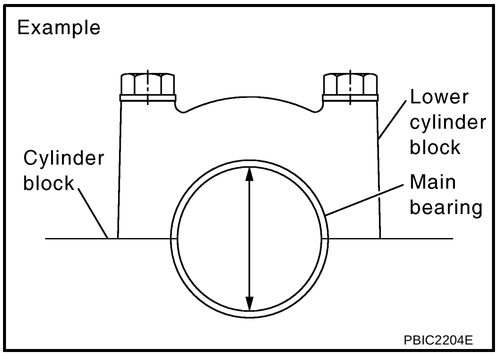

PBIC2204E

- If the clearance exceeds the limit, select proper main bearing according to main bearing inner diameter and crankshaft main journal diameter to obtain the specified bearing oil clearance. Refer to EM-94, "HOW TO SELECT MAIN BEARING" .

### Method of Using Plastigage

- Remove engine oil and dust on crankshaft main journal and the surfaces of each bearing completely.
- Cut a plastigage slightly shorter than the bearing width, and place it in crankshaft axial direction, avoiding oil holes.
- Install main bearings to cylinder block and lower cylinder block, and tighten lower cylinder block mounting bolts to the specified torque. Refer to EM-85, "ASSEMBLY" for the tightening procedure.

  **CAUTION:**
  **Do not rotate crankshaft.**
- Remove lower cylinder block and bearings, and using the scale on the plastigage bag, measure the plastigage width.

  **NOTE:**
  The procedure when the measured value exceeds the limit is same as that described in the “Method by Calculation”.

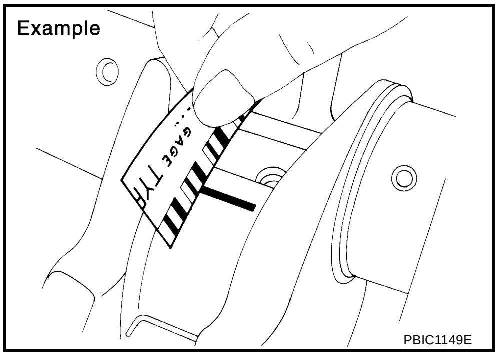

PBIC1149E

## MAIN BEARING CRUSH HEIGHT

- When lower cylinder block is removed after being tightened to the specified torque with main bearings installed, the tip end of bearing must protrude. Refer to EM-85, "ASSEMBLY" for the tightening procedure.

**Standard: There must be crush height.**

- If the standard is not met, replace main bearings.

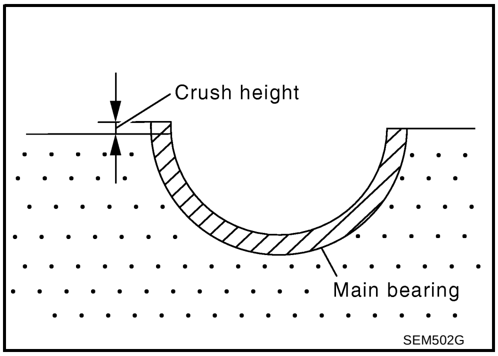


## CONNECTING ROD BEARING CRUSH HEIGHT

- When connecting rod bearing cap is removed after being tightened to the specified torque with connecting rod bearings installed, the tip end of bearing must protrude. Refer to EM-85, "ASSEMBLY" for the tightening procedure.

**Standard: There must be crush height.**

- If the standard is not met, replace connecting rod bearings.

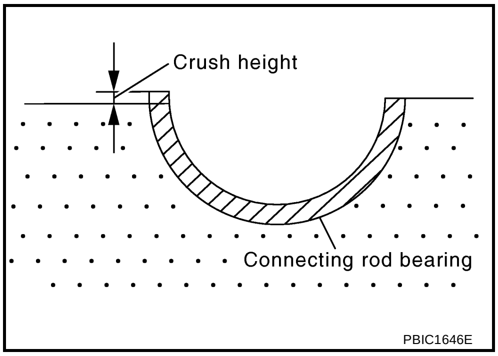


## LOWER CYLINDER BLOCK MOUNTING BOLT OUTER DIAMETER

- Perform only with M10 bolts.
- Measure the outer diameters (“$d_1$”, “$d_2$”) at two positions as shown in the figure.
- If reduction appears in “A” range, regard it as “$d_2$”.

**Limit (“$d_1$” – “$d_2$”) : 0.13 mm (0.0051 in)**

- If it exceeds the limit (a large difference in dimensions), replace lower cylinder block mounting bolt with a new one.

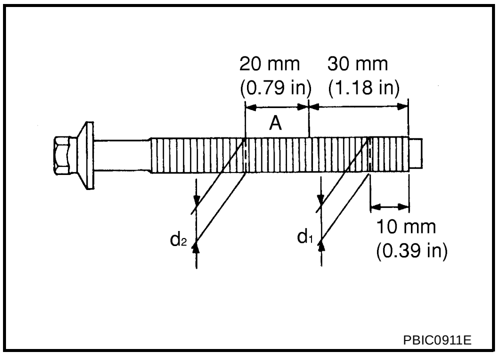


## CONNECTING ROD BOLT OUTER DIAMETER

- Measure the outer diameter “d” at position as shown in the figure.
- If reduction appears in a position other than “d”, regard it as “d”.

**Limit : 7.75 mm (0.3051 in)**

- When “d” falls below the limit (when it becomes thinner), replace connecting rod bolt with a new one.

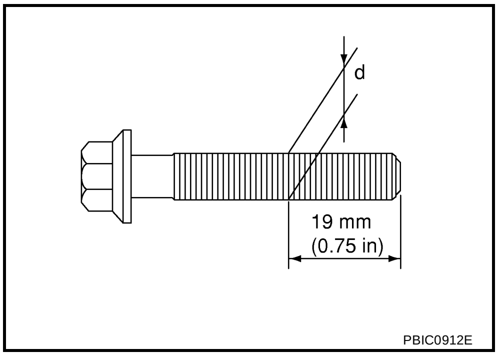

## FLYWHEEL DEFLECTION (M/T MODELS)

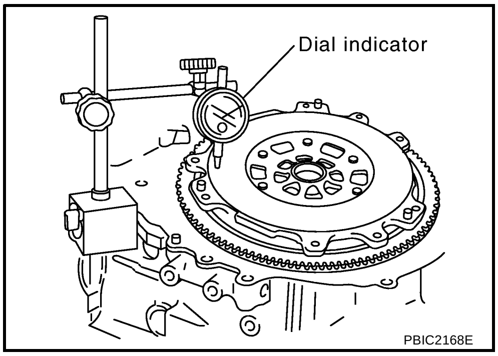


- Measure the deflection of flywheel contact surface to clutch with a dial indicator.
- Measure the deflection at 210 mm (8.27 in) dia.

**Standard : 0.45 mm (0.0177 in) or less.**

- If measured value is out of the standard, replace flywheel.

**CAUTION:**
**When measuring, keep magnetic fields (such as dial indicator stand) away from signal plate of the rear end of crankshaft.**

## MOVEMENT AMOUNT OF FLYWHEEL (M/T MODELS)

**CAUTION:**
**Do not disassemble double mass flywheel.**

### Movement Amount of Thrust (Fore-and-Aft) Direction

- Measure the movement amount of thrust (fore-and-aft) direction when 100 N (10.2 kg, 22 lb) force is added at the portion of 125 mm (4.92 in) radius from the center of flywheel.

**Standard : 1.3 mm (0.051 in) or less**

- If measured value is out of the standard, replace flywheel.

### Movement Amount in Radial (Rotation) Direction

Check the movement amount of radial (rotation) direction with the following procedure:

1. Install a bolt to clutch cover mounting hole, and place a torque wrench on the extended line of the flywheel center line.
   - Tighten bolt at a force of 9.8 N·m (1.0 kg-m, 87 in-lb) to keep it from loosening.

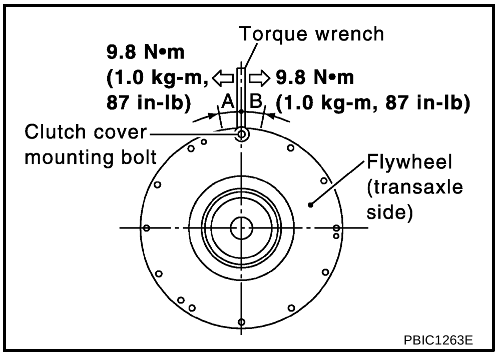


2. Put a mating mark on circumferences of the two flywheel masses without applying any load (Measurement standard points).
3. Apply a force of 9.8 N·m (1.0 kg-m, 87 in-lb) in each direction, and mark the movement amount on the mass on the transaxle side.
4. Measure the dimensions of movement amounts “A” and “B” on circumference of flywheel on the transaxle side.

**Standard: 28.3 mm (1.114 in) or less.**

- If measured value is out of the standard, replace flywheel.

# SERVICE DATA AND SPECIFICATIONS (SDS)

PFP:00030

## Standard and Limit

*ABS00CJP*

### GENERAL SPECIFICATIONS

| | | |
|---|---|---|
| Cylinder arrangement | | In-line 4 |
| Displacement | $cm^3$ (cu in) | 2,488 (151.82) |
| Bore and stroke | mm (in) | 89.0 x 100.0 (3.504 x 3.937) |
| Valve arrangement | | DOHC |
| Firing order | | 1-3-4-2 |
| Number of piston rings | Compression | 2 |
| | Oil | 1 |
| Compression ratio | | 9.5 |
| Compression pressure kPa (kg/$cm^2$ , psi) / 250 rpm | Standard | 1,250 (12.8, 181) |
| | Minimum | 1,060 (10.8, 154) |
| | Differential limit between cylinders | 100 (1.0, 14) |

### DRIVE BELT

| | |
|---|---|
| Tension of drive belt | Auto adjustment by auto-tensioner |

### INTAKE MANIFOLD AND EXHAUST MANIFOLD

Unit: mm (in)

| Items | | Limit |
|---|---|---|
| Surface distortion | Intake manifold collector | 0.1 (0.004) |
| | Intake manifold | 0.1 (0.004) |
| | Exhaust manifold and three way catalyst assembly | 0.3 (0.012) |

### SPARK PLUG

| | |
|---|---|
| Make | NGK |
| Standard type | PLFR5A-11 |
| Hot type | PLFR4A-11 |
| Cold type | PLFR6A-11 |
| Gap (nominal) | 1.1 mm (0.043 in) |

### CYLINDER HEAD

Unit: mm (in)

| Items | Limit |
|---|---|
| Head surface distortion | 0.1 (0.004) |

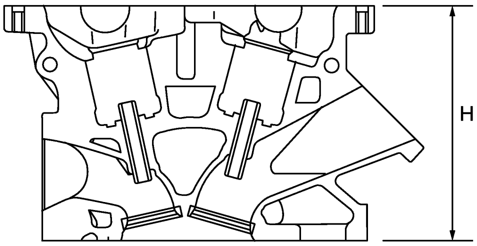


Nominal cylinder head height:
H = 129.4 mm (5.09 in)

PBIC0283E

# VALVE

## Valve Timing

| | |
|---|---|
| Valve timing | 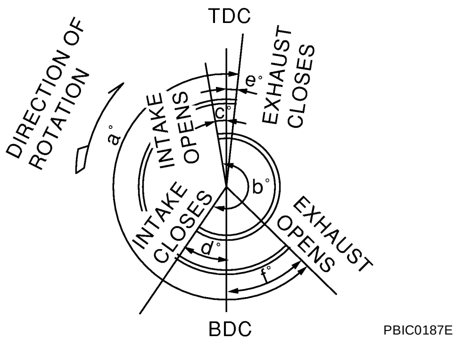 |



Unit: degree

| a | b | c | d | e | f |
|---|---|---|---|---|---|
| 224 | 244 | 0 (30) | 64 (27) | 3 | 41 |

(   ): Valve timing control “ON”

## Valve Dimensions

Unit: mm (in)

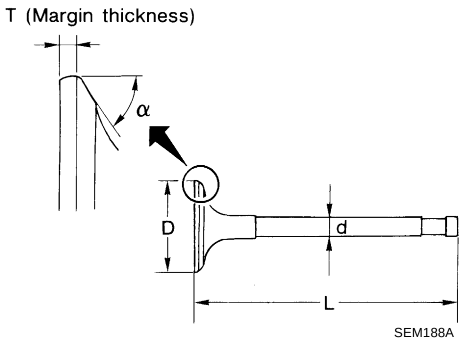



| | | |
|---|---|---|
| Valve head diameter “D” | Intake | 35.5 - 35.8 (1.398 - 1.409) |
| | Exhaust | 30.5 - 30.8 (1.201 - 1.213) |
| Valve length “L” | Intake | 97.16 (3.8252) |
| | Exhaust | 98.82 (3.8905) |
| Valve stem diameter “d” | Intake | 5.965 - 5.980 (0.2348 - 0.2354) |
| | Exhaust | 5.955 - 5.970 (0.2344 - 0.2350) |
| Valve seat angle “α” | Intake | 45°15′ - 45°45′ |
| | Exhaust | |
| Valve margin “T” | Intake | 1.1 (0.043) |
| | Exhaust | 1.3 (0.051) |

## Valve Clearance

Unit: mm (in)

| Items | Cold | Hot* (reference data) |
|---|---|---|
| Intake | 0.24 - 0.32 (0.009 - 0.013) | 0.304 - 0.416 (0.012 - 0.016) |
| Exhaust | 0.26 - 0.34 (0.010 - 0.013) | 0.308 - 0.432 (0.012 - 0.017) |

*: Approximately 80°C (176°F)

## Available Valve Lifter

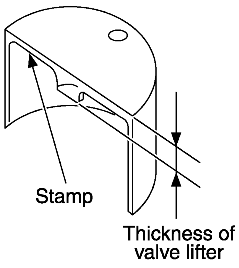


| Thickness mm (in) | Identification mark |
|---|---|
| 6.96 (0.2740) | 696 |
| 6.98 (0.2748) | 698 |
| 7.00 (0.2756) | 700 |
| 7.02 (0.2764) | 702 |
| 7.04 (0.2772) | 704 |
| 7.06 (0.2780) | 706 |
| 7.08 (0.2787) | 708 |
| 7.10 (0.2795) | 710 |
| 7.12 (0.2803) | 712 |
| 7.14 (0.2811) | 714 |
| 7.16 (0.2819) | 716 |
| 7.18 (0.2827) | 718 |
| 7.20 (0.2835) | 720 |
| 7.22 (0.2843) | 722 |
| 7.24 (0.2850) | 724 |
| 7.26 (0.2858) | 726 |
| 7.28 (0.2866) | 728 |
| 7.30 (0.2874) | 730 |
| 7.32 (0.2882) | 732 |
| 7.34 (0.2890) | 734 |
| 7.36 (0.2898) | 736 |
| 7.38 (0.2906) | 738 |
| 7.40 (0.2913) | 740 |
| 7.42 (0.2921) | 742 |
| 744 (0.2929) | 744 |
| 7.46 (0.2937) | 746 |

## Valve Spring

| Items | Intake | Exhaust |
|---|---|---|
| Free height | 44.84 - 45.34 mm (1.7654 - 1.7850 in) | 45.28 - 45.78 mm (1.7827 - 1.8024 in) |
| Installation height | 35.30 mm (1.390 in) | 35.30 mm (1.390 in) |
| Installation load | 151 - 175 N (15.4 - 17.8 kg, 34 - 39 lb) | 151 - 175 N (15.4 - 17.8 kg, 34 - 39 lb) |
| Height during valve open | 24.94 mm (0.9819 in) | 26.39 mm (1.0390 in) |
| Load with valve open | 358 - 408 N (36.5 - 41.6 kg, 80 - 92 lb) | 325 - 371 N (33.1 - 37.8 kg, 73 - 83 lb) |
| Identification color | Blue | Yellow |

A EM C D E F G H I J K L M

## Valve Lifter

Unit: mm (in)

| Items | Standard |
|---|---|
| Valve lifter outer diameter | 33.965 - 33.980 (1.3372 - 1.3378) |
| Valve lifter hole diameter | 34.000 - 34.021 (1.3386 - 1.3394) |
| Valve lifter clearance | 0.020 - 0.056 (0.0008 - 0.0022) |

## Valve Guide

Unit: mm (in)

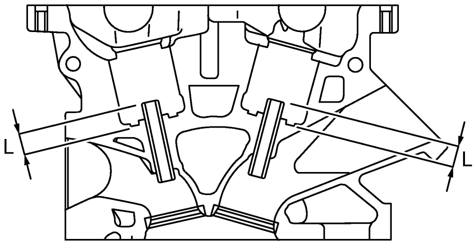


PBIC0184E

| Items | | Standard part | Service part |
|---|---|---|---|
| Valve guide | Outer diameter | 10.023 - 10.034 (0.3946 - 0.3950) | 10.223 - 10.234 (0.4025 - 0.4029) |
| | Inner diameter (Finished size) | 6.000 - 6.018 (0.2362 - 0.2369) | |
| Cylinder head valve guide hole diameter | | 9.975 - 9.996 (0.3927 - 0.3935) | 10.175 - 10.196 (0.4006 - 0.4014) |
| Interference fit of valve guide | | 0.027 - 0.059 (0.0011 - 0.0023) | |
| Items | | Standard | Limit |
| Valve guide clearance | Intake | 0.020 - 0.053 (0.0008 - 0.0021) | 0.08 (0.003) |
| | Exhaust | 0.030 - 0.063 (0.0012 - 0.0025) | 0.09 (0.004) |
| Projection length “L” | Intake | 10.1 - 10.3 (0.398 - 0.406) | |
| | Exhaust | 10.0 - 10.4 (0.394 - 0.409) | |

## Valve Seat

Unit: mm (in)

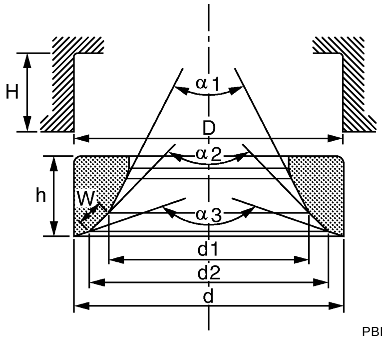


PBIC2745E

| Items | | Standard | Oversize [0.5 (0.02)] (Service) |
|---|---|---|---|
| Cylinder head seat recess diameter “D” | Intake | 36.500 - 36.516 (1.4370 - 1.4376) | 37.000 - 37.016 (1.4567 - 1.4573) |
| | Exhaust | 31.500 - 31.516 (1.2402 - 1.2408) | 32.000 - 32.016(1.2598 - 1.2605) |
| Valve seat outer diameter “d” | Intake | 36.597 - 36.613 (1.4408 - 1.4415) | 37.097 - 37.113 (1.4605 - 1.4611) |
| | Exhaust | 31.600 - 31.616 (1.2441 - 1.2447) | 32.100 - 32.116 (1.2638 - 1.2644) |
| Valve seat interference fit | Intake | 0.081 - 0.113 (0.0032 - 0.0044) | |
| | Exhaust | 0.084 - 0.116 (0.0033 - 0.0046) | |
| Diameter “d1”*1 | Intake | 33.5 (1.319) | |
| | Exhaust | 28.0 (1.102) | |
| Diameter “d2”*2 | Intake | 35.1 - 35.3 (1.382 - 1.390) | |
| | Exhaust | 29.9 - 30.1 (1.177 - 1.185) | |
| Angle “α1” | Intake | 60° | |
| | Exhaust | 60° | |
| Angle “α2” | Intake | 88°45′ - 90°15′ | |
| | Exhaust | 88°45′ - 90°15′ | |
| Angle “α3” | Intake | 120° | |
| | Exhaust | 120° | |
| Contacting width “W”*3 | Intake | 1.05 - 1.35 (0.0413 - 0.0531) | |
| | Exhaust | 1.25 - 1.55 (0.0492 - 0.0610) | |
| Height “h” | Intake | 5.9 - 6.0 (0.232 - 0.236) | 5.0 - 5.1 (0.197 - 0.201) |
| | Exhaust | 5.9 - 6.0 (0.232 - 0.236) | 4.91 - 5.01 (0.1933 - 0.1972) |
| Depth “H” | | 6.0 (0.236) | |

*1 : Diameter made by intersection point of conic angles α1 and α2

*2 : Diameter made by intersection point of conic angles α2 and α3

*3 : Machining data

## CAMSHAFT AND CAMSHAFT BEARING

Unit: mm (in)

| Items | | Standard | Limit |
|---|---|---|---|
| Camshaft journal oil clearance | | 0.045 - 0.086 (0.0018 - 0.0034) | — |
| Camshaft bracket inner diameter | No. 1 | 28.000 - 28.021 (1.1024 - 1.1032) | — |
| | No. 2, 3, 4, 5 | 23.500 - 23.521 (0.9252 - 0.9260) | — |
| Camshaft journal outer diameter | No. 1 | 27.935 - 27.955 (1.0998 - 1.1006) | — |
| | No. 2, 3, 4, 5 | 23.435 - 23.455 (0.9226 - 0.9234) | — |
| Camshaft end play | | 0.115 - 0.188 (0.0045 - 0.0074) | — |
| Camshaft cam height "A" | Intake | 45.665 - 45.855 (1.7978 - 1.8053) | 0.2 (0.008)*1 |
| | Exhaust | 43.975 - 44.165 (1.7313 - 1.7388) | |
| Camshaft runout [TIR*2 ] | | Less than 0.02 (0.0008) | — |
| Camshaft sprocket runout [TIR*2 ] | | — | 0.15 (0.0059) |

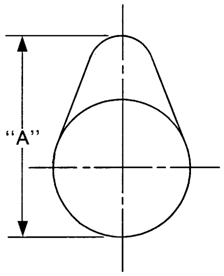


SEM671

*1 : Cam wear limit

*2 : Total indicator reading

## CYLINDER BLOCK

Unit: mm (in)

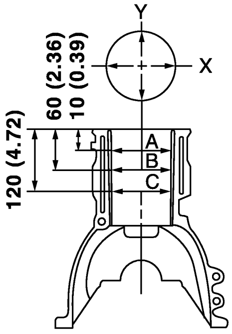


PBIC0281E

| | | | | |
|---|---|---|---|---|
| Surface distortion | | Limit | | 0.1 (0.004) |
| Cylinder bore | Inner diameter | Standard | Grade No. 2 | 89.010 - 89.020 (3.5043 - 3.5047) |
| | | | Grade No. 3 | 89.020 - 89.030 (3.5047 - 3.5051) |
| | | Wear limit | | 0.2 (0.008) |
| Out-of-round (Difference between "X" and "Y") | | Limit | | 0.015 (0.0006) |
| Taper (Difference between "A" and "C") | | | | 0.01 (0.0004) |

| | | | |
|---|---|---|---|
| Main bearing housing inner diameter grade | | Grade No. A | 58.944 - 58.945 (2.3206 - 2.3207) |
| | | Grade No. B | 58.945 - 58.946 (2.3207 - 2.3207) |
| | | Grade No. C | 58.946 - 58.947 (2.3207 - 2.3207) |
| | | Grade No. D | 58.947 - 58.948 (2.3207 - 2.3208) |
| | | Grade No. E | 58.948 - 58.949 (2.3208 - 2.3208) |
| | | Grade No. F | 58.949 - 58.950 (2.3208 - 2.3209) |
| | | Grade No. G | 58.950 - 58.951 (2.3209 - 2.3209) |
| | | Grade No. H | 58.951 - 58.952 (2.3209 - 2.3209) |
| | | Grade No. J | 58.952 - 58.953 (2.3209 - 2.3210) |
| | | Grade No. K | 58.953 - 58.954 (2.3210 - 2.3210) |
| | | Grade No. L | 58.954 - 58.955 (2.3210 - 2.3211) |
| | | Grade No. M | 58.955 - 58.956 (2.3211 - 2.3211) |
| | | Grade No. N | 58.956 - 58.957 (2.3211 - 2.3211) |
| | | Grade No. P | 58.957 - 58.958 (2.3211 - 2.3212) |
| | | Grade No. R | 58.958 - 58.959 (2.3212 - 2.3212) |
| | | Grade No. S | 58.959 - 58.960 (2.3212 - 2.3213) |
| | | Grade No. T | 58.960 - 58.961 (2.3213 - 2.3213) |
| | | Grade No. U | 58.961 - 58.962 (2.3213 - 2.3213) |
| | | Grade No. V | 58.962 - 58.963 (2.3213 - 2.3214) |
| | | Grade No. W | 58.963 - 58.964 (2.3214 - 2.3214) |
| | | Grade No. X | 58.964 - 58.965 (2.3214 - 2.3215) |
| | | Grade No. Y | 58.965 - 58.966 (2.3215 - 2.3215) |
| | | Grade No. 4 | 58.966 - 58.967 (2.3215 - 2.3215) |
| | | Grade No. 7 | 58.967 - 58.968 (2.3215 - 2.3216) |
| Difference in inner diameter between cylinders | Standard | | Less than 0.03 (0.0012) |

## PISTON, PISTON RING AND PISTON PIN

### Available Piston

Unit: mm (in)

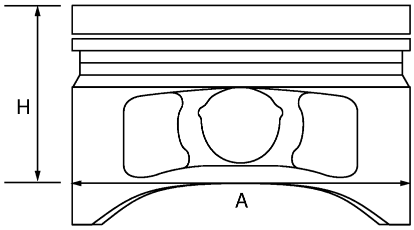


PBIC0188E

| | | | |
|---|---|---|---|
| Piston skirt diameter “A” | Standard | Grade No. 2 | 88.990 - 89.000 (3.5035 - 3.5039) |
| | | Grade No. 3 | 89.000 - 89.010 (3.5039 - 3.5043) |
| | | 0.20 (0.008) oversize (Service) | 89.180 - 89.210 (3.5110 - 3.5122) |
| Piston height “H” dimension | | | 42.0 (1.654) |
| Piston pin hole diameter | | Grade No. 0 | 19.993 - 19.999 (0.7871 - 0.7874) |
| | | Grade No. 1 | 19.999 - 20.005 (0.7874 - 0.7876) |
| Piston to cylinder bore clearance | | Standard | 0.010 - 0.030 (0.0004 - 0.0012) |
| | | Limit | 0.08 (0.0031) |

### Piston Ring

Unit: mm (in)

| Items | | Standard | Limit |
|---|---|---|---|
| Side clearance | Top | 0.045 - 0.080 (0.0018 - 0.0031) | 0.11 (0.0043) |
| | 2nd | 0.030 - 0.070 (0.0012 - 0.0028) | 0.10 (0.0039) |
| | Oil ring | 0.065 - 0.135 (0.0026 - 0.0053) | — |
| End gap | Top | 0.21- 0.31 (0.0083 - 0.0122) | 0.54 (0.0213) |
| | 2nd | 0.32 - 0.47 (0.0126 - 0.0185) | 0.67 (0.0264) |
| | Oil (rail ring) | 0.20 - 0.60 (0.0079 - 0.0236) | 0.95 (0.0374) |

### Piston Pin

Unit: mm (in)

| | | |
|---|---|---|
| Piston pin outer diameter | Grade No. 0 | 19.989 - 19.995 (0.7870 - 0.7872) |
| | Grade No. 1 | 19.995 - 20.001 (0.7872 - 0.7874) |
| Piston to piston pin oil clearance | Standard | 0.002 - 0.006 (0.0001 - 0.0002) |
| Connecting rod bushing oil clearance | Standard | 0.005 - 0.017 (0.0002 - 0.0007) |

## CONNECTING ROD

Unit: mm (in)

| | | |
|---|---|---|
| Center distance | | 143.00 - 143.10 (5.630 - 5.634) |
| Bend [per 100 (3.94)] | Limit | 0.15 (0.0059) |
| Torsion [per 100 (3.94)] | Limit | 0.30 (0.0118) |
| Connecting rod bushing inner diameter* | Grade No. 0 | 20.000 - 20.006 (0.7874 - 0.7876) |
| | Grade No. 1 | 20.006 - 20.012 (0.7876 - 0.7879) |
| Side clearance | Standard | 0.20 - 0.35 (0.0079 - 0.0138) |
| | Limit | 0.50 (0.0197) |
| Connecting rod big end diameter | Grade No. 0 | 48.000 - 48.001 (1.8898 - 1.8898) |
| | Grade No. 1 | 48.001 - 48.002 (1.8898 - 1.8898) |
| | Grade No. 2 | 48.002 - 48.003 (1.8898 - 1.8899) |
| | Grade No. 3 | 48.003 - 48.004 (1.8899 - 1.8899) |
| | Grade No. 4 | 48.004 - 48.005 (1.8899 - 1.8900) |
| | Grade No. 5 | 48.005 - 48.006 (1.8900 - 1.8900) |
| | Grade No. 6 | 48.006 - 48.007 (1.8900 - 1.8900) |
| | Grade No. 7 | 48.007 - 48.008 (1.8900 - 1.8901) |
| | Grade No. 8 | 48.008 - 48.009 (1.8901 - 1.8901) |
| | Grade No. 9 | 48.009 - 48.010 (1.8901 - 1.8902) |
| | Grade No. A | 48.010 - 48.011 (1.8902 - 1.8902) |
| | Grade No. B | 48.011 - 48.012 (1.8902 - 1.8902) |
| | Grade No. C | 48.012 - 48.013 (1.8902 - 1.8903) |

*: After installing in connecting rod

## CRANKSHAFT

Unit: mm (in)

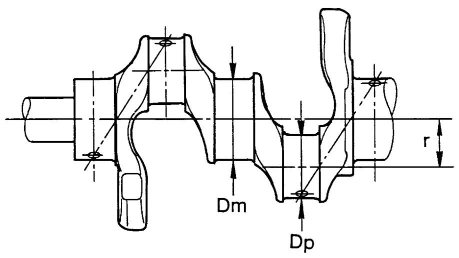


SEM645

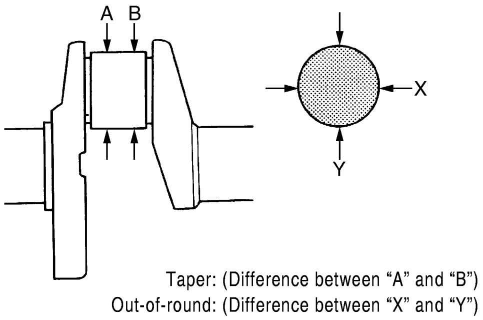


SBIA0535E

| | | |
|---|---|---|
| Center distance “r” | | 49.96 - 50.04 (1.9669 - 1.9701) |
| Out-of-round (Difference between “X” and “Y”) | Limit | 0.005 (0.0002) |
| Taper (Difference between “A” and “B”) | Limit | 0.005 (0.0002) |
| Runout [TIR*] | Limit | 0.05 (0.0020) |
| Crankshaft end play | Standard | 0.10 - 0.26 (0.0039 - 0.0102) |
| | Limit | 0.30 (0.0118) |

| | | |
|---|---|---|
| Pin journal diameter grade. “DP” | Grade No. A | 44.974 - 44.973 (1.7706 - 1.7706) |
| | Grade No. B | 44.973 - 44.972 (1.7706 - 1.7705) |
| | Grade No. C | 44.972 - 44.971 (1.7705 - 1.7705) |
| | Grade No. D | 44.971 - 44.970 (1.7705 - 1.7705) |
| | Grade No. E | 44.970 - 44.969 (1.7705 - 1.7704) |
| | Grade No. F | 44.969 - 44.968 (1.7704 - 1.7704) |
| | Grade No. G | 44.968 - 44.967 (1.7704 - 1.7704) |
| | Grade No. H | 44.967 - 44.966 (1.7704 - 1.7703) |
| | Grade No. J | 44.966 - 44.965 (1.7703 - 1.7703) |
| | Grade No. K | 44.965 - 44.964 (1.7703 - 1.7702) |
| | Grade No. L | 44.964 - 44.963 (1.7702 - 1.7702) |
| | Grade No. M | 44.963 - 44.962 (1.7702 - 1.7702) |
| | Grade No. N | 44.962 - 44.961 (1.7702 - 1.7701) |
| | Grade No. P | 44.961 - 44.960 (1.7701 - 1.7701) |
| | Grade No. R | 44.960 - 44.959 (1.7701 - 1.7700) |
| | Grade No. S | 44.959 - 44.958 (1.7700 - 1.7700) |
| | Grade No. T | 44.958 - 44.957 (1.7700 - 1.7700) |
| | Grade No. U | 44.957 - 44.956 (1.7700 - 1.7699) |
| Main journal diameter grade. “Dm” | Grade No. A | 54.979 - 54.978 (2.1645 - 2.1645) |
| | Grade No. B | 54.978 - 54.977 (2.1645 - 2.1644) |
| | Grade No. C | 54.977 - 54.976 (2.1644 - 2.1644) |
| | Grade No. D | 54.976 - 54.975 (2.1644 - 2.1644) |
| | Grade No. E | 54.975 - 54.974 (2.1644 - 2.1643) |
| | Grade No. F | 54.974 - 54.973 (2.1643 - 2.1643) |
| | Grade No. G | 54.973 - 54.972 (2.1643 - 2.1642) |
| | Grade No. H | 54.972 - 54.971 (2.1642 - 2.1642) |
| | Grade No. J | 54.971 - 54.970 (2.1642 - 2.1642) |
| | Grade No. K | 54.970 - 54.969 (2.1642 - 2.1641) |
| | Grade No. L | 54.969 - 54.968 (2.1641 - 2.1641) |
| | Grade No. M | 54.968 - 54.967 (2.1641 - 2.1641) |
| | Grade No. N | 54.967 - 54.966 (2.1641 - 2.1640) |
| | Grade No. P | 54.966 - 54.965 (2.1640 - 2.1640) |
| | Grade No. R | 54.965 - 54.964 (2.1640 - 2.1639) |
| | Grade No. S | 54.964 - 54.963 (2.1639 - 2.1639) |
| | Grade No. T | 54.963 - 54.962 (2.1639 - 2.1639) |
| | Grade No. U | 54.962 - 54.961 (2.1639 - 2.1638) |
| | Grade No. V | 54.961 - 54.960 (2.1638 - 2.1638) |
| | Grade No. W | 54.960 - 54.959 (2.1638 - 2.1637) |
| | Grade No. X | 54.959 - 54.958 (2.1637 - 2.1637) |
| | Grade No. Y | 54.958 - 54.957 (2.1637 - 2.1637) |
| | Grade No. 4 | 54.957 - 54.956 (2.1637 - 2.1636) |
| | Grade No. 7 | 54.956 - 54.955 (2.1636 - 2.1636) |

*: Total indicator reading

## MAIN BEARING

Unit: mm (in)

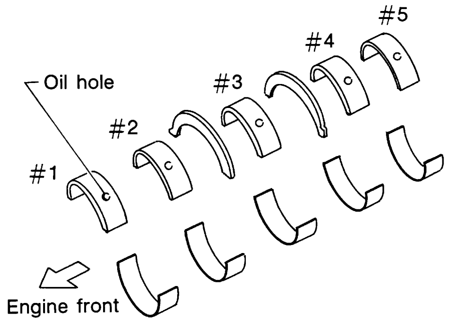


SEM685D

| Grade number | | Thickness | Identification color | Remarks |
|---|---|---|---|---|
| 0 | | 1.973 - 1.976 (0.0777 - 0.0778) | Black | Grade and color are the same for upper and lower bearings. |
| 1 | | 1.976 - 1.979 (0.0778 - 0.0779) | Brown | |
| 2 | | 1.979 - 1.982 (0.0779 - 0.0780) | Green | |
| 3 | | 1.982 - 1.985 (0.0780 - 0.0781) | Yellow | |
| 4 | | 1.985 - 1.988 (0.0781 - 0.0783) | Blue | |
| 5 | | 1.988 - 1.991 (0.0783 - 0.0784) | Pink | |
| 6 | | 1.991 - 1.994 (0.0784 - 0.0785) | Purple | |
| 7 | | 1.994 - 1.997 (0.0785 - 0.0786) | White | |
| 01 | UPR | 1.973 - 1.976 (0.0777 - 0.0778) | Black | Grade and color are different for upper and lower bearings. |
| | LWR | 1.976 - 1.979 (0.0778 - 0.0779) | Brown | |
| 12 | UPR | 1.976 - 1.979 (0.0778 - 0.0779) | Brown | |
| | LWR | 1.979 - 1.982 (0.0779 - 0.0780) | Green | |
| 23 | UPR | 1.979 - 1.982 (0.0779 - 0.0780) | Green | |
| | LWR | 1.982 - 1.985 (0.0780 - 0.0781) | Yellow | |
| 34 | UPR | 1.982 - 1.985 (0.0780 - 0.0781) | Yellow | |
| | LWR | 1.985 - 1.988 (0.0781 - 0.0783) | Blue | |
| 45 | UPR | 1.985 - 1.988 (0.0781 - 0.0783) | Blue | |
| | LWR | 1.988 - 1.991 (0.0783 - 0.0784) | Pink | |
| 56 | UPR | 1.988 - 1.991 (0.0783 - 0.0784) | Pink | |
| | LWR | 1.991 - 1.994 (0.0784 - 0.0785) | Purple | |
| 67 | UPR | 1.991 - 1.994 (0.0784 - 0.0785) | Purple | |
| | LWR | 1.994 - 1.997 (0.0785 - 0.0786) | White | |

### Undersize

Unit: mm (in)

| Item | Thickness | Main journal diameter |
|---|---|---|
| US 0.25 (0.0098) | 2.106 - 2.114 (0.0829 - 0.0832) | Grind so that bearing clearance is the specified value. |

### Bearing Oil Clearance

Unit: mm (in)

| | | | |
|---|---|---|---|
| Main bearing oil clearance | Standard | No. 1, 3 and 5 | 0.012 - 0.022 (0.0005 - 0.0009) |
| | | No. 2 and 4 | 0.018 - 0.028 (0.0007 - 0.0011) |
| | Limit | | 0.1 (0.004) |

## CONNECTING ROD BEARING

| Grade number | Thickness mm (in) | Identification color |
|---|---|---|
| 0 | 1.495 - 1.499 (0.0589 - 0.0590) | Black |
| 1 | 1.499 - 1.503 (0.0590 - 0.0592) | Brown |
| 2 | 1.503 - 1.507 (0.0592 - 0.0593) | Green |
| 3 | 1.507 - 1.511(0.0593 - 0.0595) | Yellow |

### Undersize

Unit: mm (in)

| Item | Thickness | Crank pin journal diameter |
|---|---|---|
| US 0.25 (0.0098) | 1.624 - 1.632 (0.0639 - 0.0643) | Grind so that bearing clearance is the specified value. |

### Bearing Oil Clearance

Unit: mm (in)

| | | |
|---|---|---|
| Connecting rod bearing oil clearance | Standard | 0.028 - 0.045 (0.0011 - 0.0018) |
| | Limit | 0.10 (0.0039) |